PRODUCT INFORMATION

AGILA

2470YGO125R05-28

EAN 4031582344356

BETTER MOBILITY. BETTER LIFE.

Image may differ from the original product

PERFORMANCE

Roll Performance	●●●○○
Movement noise	●●●○○
Attrition	●●●○○
Corrosion resistance	●●●○○

CORE ATTRIBUTES

Product name	Agila
Type	Swivel caster
Standard	EN12530 - Devices Castors
Load capacity at 1.8 mph	220.46 lb
Electric conductive	Yes
Stainless	no
Load capacity Static	440.92 lb
Temperature range (Minimum)	-4 °F
Temperature range (Maximum)	140 °F
Overall height	6.42 in
Overall weight	1.97 lb

HOUSING

Housing Material	Steel sheet, medium
Fork shape	Broad
Swivel bearing	Two ball races
Housing Color	Blue passivated
Offset	1.61 in
Swivel radius	4.07 in
Swivel interference	8.15 in

WHEEL

Body material	Polypropylene, electric conductive
Tread material	Thermoplastic rubber, electric-conductive
Bearing	Plain bearing
Threadguards	Without threadguard
Diameter	4.92 in
Tread width	1.26 in
Hardness of tread (A)	87 Shore A

FITTING

Fitting type	Solid stem, round
Bolt diameter	1.1 in
Bolt length	1.77 in

© Copyright 2026 TENTE International GmbH

AGILA

2470YGO125R05-28

EAN 4031582344356

BETTER MOBILITY. BETTER LIFE.
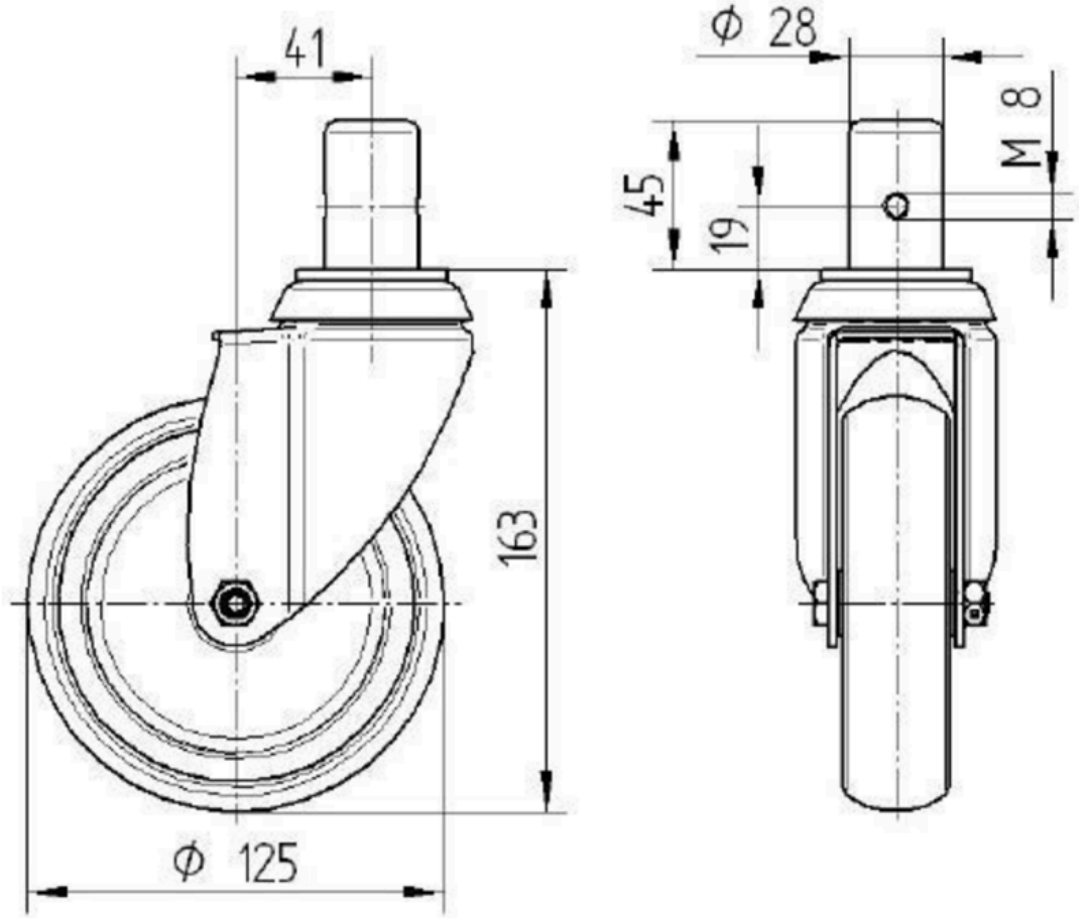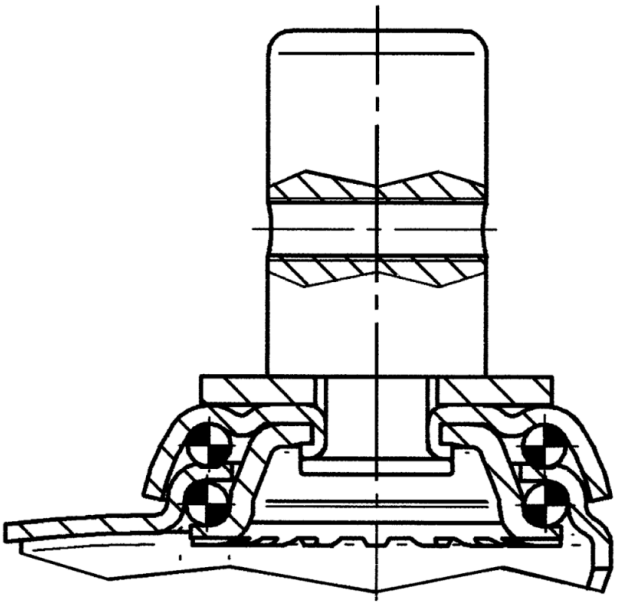
Product Drawings