PRODUCT INFORMATION

DELTA

3642ITP200P63 f.d-lock

EAN 4031582337433



Image may differ from the original product

PERFORMANCE

Roll Performance	●●●○○
Movement noise	●●●○○
Attrition	●●●●○
Corrosion resistance	●●●○○

CORE ATTRIBUTES

Product name	Delta
Type	Swivel caster with total lock, head end of caster
Standard	EN12532 - Transport Equipment
Load capacity at 2.5 mph	1322.77 lb
Load capacity at 3.7 mph	1058.22 lb
Electric conductive	no
Stainless	no
Load capacity Static	2645.54 lb
Temperature range (Minimum)	14 °F
Temperature range (Maximum)	140 °F
Overall height	9.84 in
Overall width	3.7 in
Overall weight	8 lb

HOUSING

Housing Material	Steel sheet, heavy
Fork shape	Broad, reinforced
Swivel bearing	Precision ball bearing
Housing Color	Blue passivated
Offset	2.17 in
Swivel radius	6.1 in
Swivel interference	12.2 in
Dome diameter	3.7 in

WHEEL

Body material	Aluminum
Tread material	Polyurethane, casted
Bearing	Precision ball bearing
Axle	Screwed with nut
Wheel color	Honey yellow (RAL1005)
Threadguards	Without threadguard
Diameter	7.87 in
Tread width	1.97 in
Body width	1.97 in
Hardness of tread (A)	92 Shore A
Hardness of tread (D)	42 Shore D

FITTING

Fitting type	Rectangular plate
Plate length	5.39 in
Plate width	4.13 in
Plate hole length (Minimum)	2.95 in
Plate hole length (Maximum)	3.15 in
Plate hole width (Minimum)	4.13 in
Plate hole width (Maximum)	4.13 in
Plate hole diameter	0.43 in

© Copyright 2026 TENTE International GmbH

DELTA

3642ITP200P63 f.d-lock

EAN 4031582337433

Order number 00833704

Product Drawings

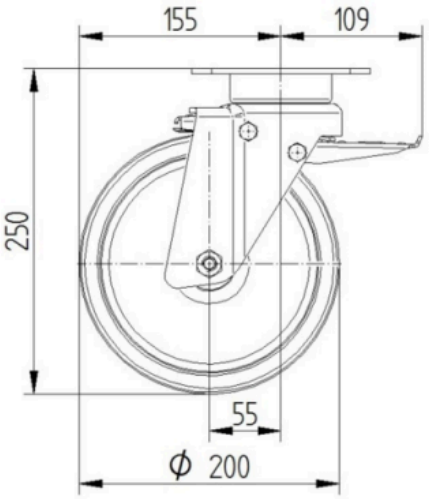

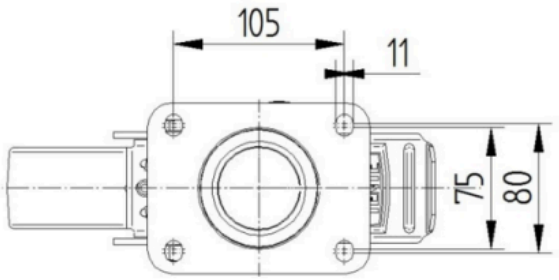

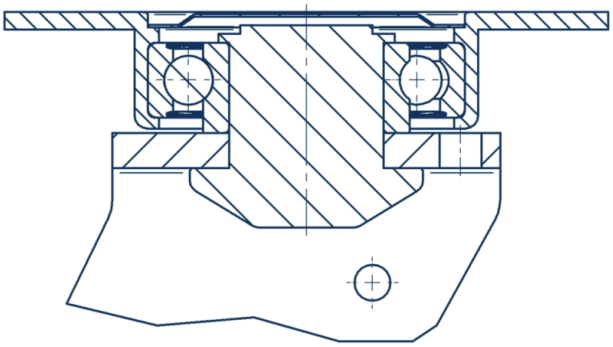

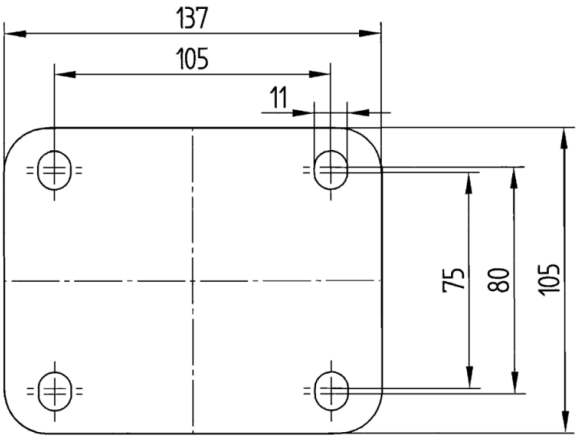

© Copyright 2026 TENTE International GmbH