PRODUCT INFORMATION

ELASTECH

IFP 200x50-Ø25

EAN 4031582319842



Image may differ from the original product

WHEEL

Tread hardness	soft
Body material	Aluminum
Tread material	Elastic tire, non-marking, vulcanized
Bearing	Precision ball bearing
Wheel color	Gray / non- marking
Threadguards	Without threadguard
Diameter	7.87 in
Tread width	1.97 in
Axle hole diameter	0.98 in
Hub length	2.36 in
Body width	1.97 in
Hardness of tread (A)	68 Shore A

PERFORMANCE

Roll Performance	●●○○○
Movement noise	●●●●●
Attrition	●●●○○
Corrosion resistance	●●●○○

CORE ATTRIBUTES

Product name	Elastech
Type	Wheel
Standard	EN12532 - Transport Equipment
Load capacity at 2.5 mph	992.08 lb
Load capacity at 3.7 mph	793.66 lb
Electric conductive	no
Stainless	no
Load capacity Static	1984.16 lb
Temperature range (Minimum)	-4 °F
Temperature range (Maximum)	185 °F
Overall weight	3.77 lb

© Copyright 2026 TENTE International GmbH

ELASTECH

IFP 200x50-Ø25

EAN 4031582319842

Order number 00830632

Product Drawings

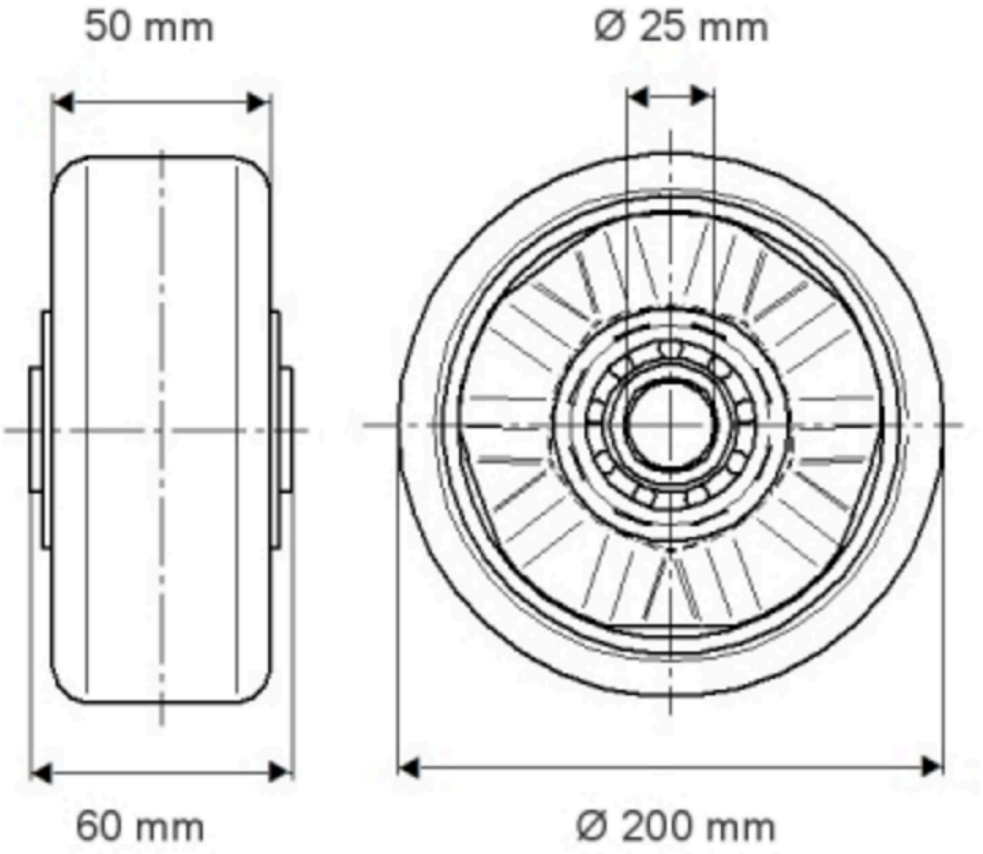

© Copyright 2026 TENTE International GmbH

ELASTECH

IFP 200x50-Ø25

EAN 4031582319342

Order number 00330632

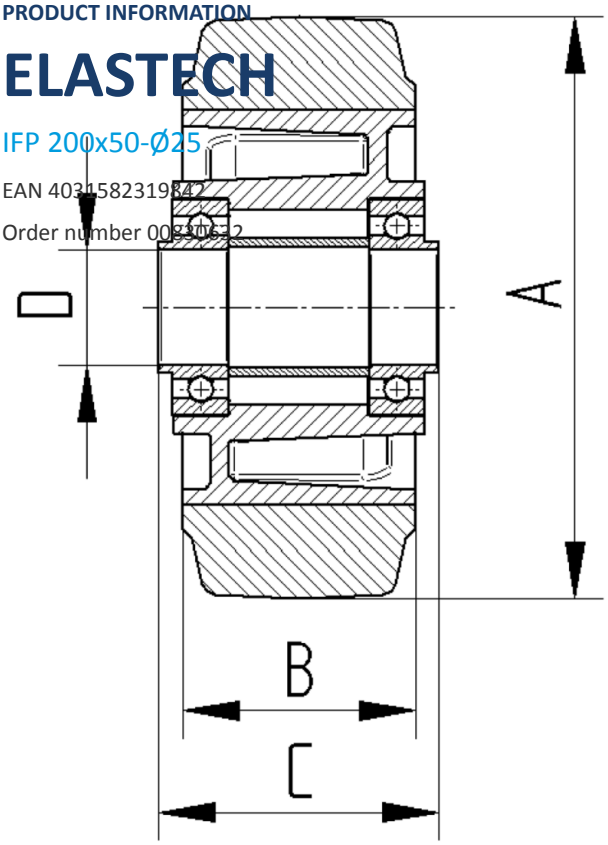

© Copyright 2026 TENTE International GmbH