PRODUCT INFORMATION

AGILA

2477UAP100R47-32-35

EAN 4031582327137



Image may differ from the original product

PERFORMANCE

Roll Performance	●●●○○
Movement noise	●●●○○
Attrition	●●●●○
Corrosion resistance	●●●○○

CORE ATTRIBUTES

Product name	Agila
Type	Swivel caster with total lock
Standard	EN12530 - Devices Castors
Load capacity at 1.8 mph	220.46 lb
Electric conductive	no
Stainless	no
Load capacity Static	440.92 lb
Temperature range (Minimum)	14 °F
Temperature range (Maximum)	104 °F
Overall height	5.43 in

HOUSING

Housing Material	Steel sheet, medium
Fork shape	Broad
Swivel bearing	Two ball races
Housing Color	Blue passivated
Offset	1.71 in
Swivel radius	5.16 in
Swivel interference	10.31 in

WHEEL

Body material	Polyamide
Tread material	Polyurethane, injected
Bearing	Precision ball bearing
Threadguards	With threadguard
Diameter	3.94 in
Tread width	1.26 in
Hardness of tread (D)	40 Shore D

FITTING

Fitting type	Synthetic expander, square
Expander fitting (Minimum)	1.26 in
Expander fitting (Maximum)	1.38 in
Hint	Please indicate required tube innerdiameter when ordering.

© Copyright 2026 TENTE International GmbH

AGILA

2477UAP100R47-32-35

EAN 4031582327137

BETTER MOBILITY. BETTER LIFE.

Product Drawings

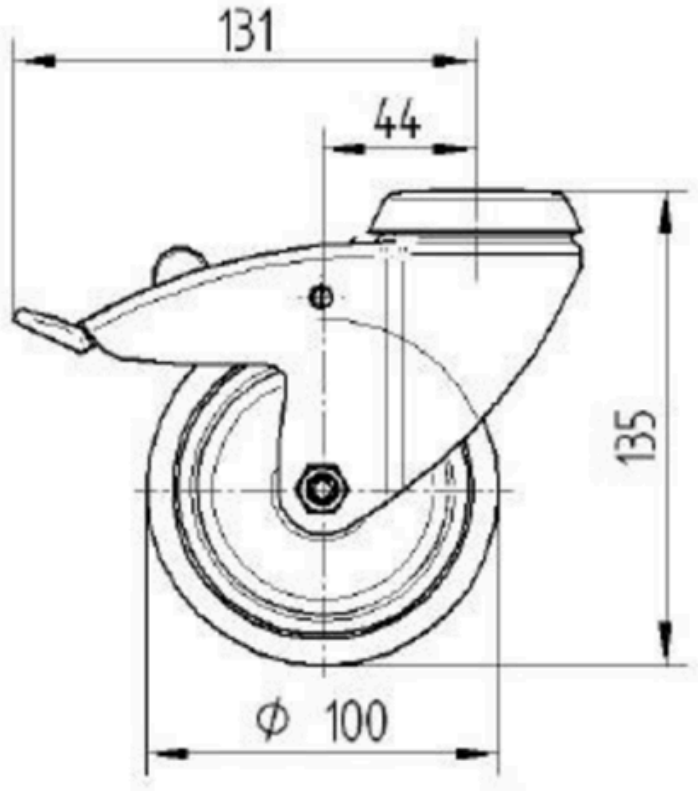

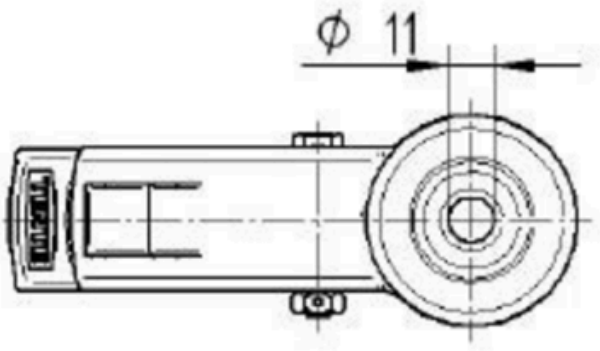

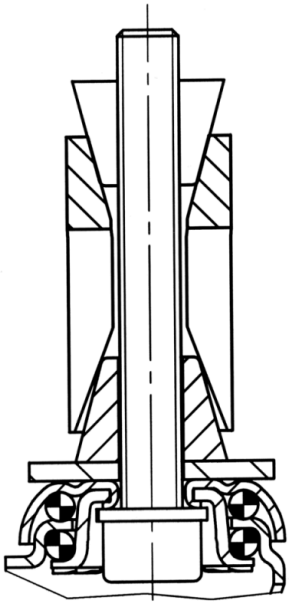

© Copyright 2026 TENTE International GmbH