PRODUCT INFORMATION

ELASTECH

IFP125x50-Ø25

EAN 4031582319804

BETTER MOBILITY. BETTER LIFE.



Image may differ from the original product

PERFORMANCE

Roll Performance	●●●○○
Movement Noise	●●●○○
Attrition	●●●○○
Corrosion Resistance	●●●○○

CORE ATTRIBUTES

Product Name	Elastech
Type	Wheel
Standard	EN12532 - Transport Equipment
Load capacity at 4 km/h	300 kg
Load capacity at 6 km/h	240 kg
Electric Conductive	No
Stainless	No
Load capacity Static	600 kg
Temperature range (Minimum)	-20 °C
Temperature range (Maximum)	85 °C
Overall weight	0.84 kg

WHEEL

Tread hardness	soft
Body material	Aluminium
Tread Material Mix	Elastic tire, non-marking, vulcanized
Bearing	Precision ball bearing
Threadguards	Without threadguard
Diameter	125 mm
Tread width	50 mm
Axle Hole Diameter	25 mm
Hub Length	60 mm
Hardness of tread (A)	68 Shore A

© Copyright 2026 TENTE International GmbH

ELASTECH

IFP125x50-Ø25

EAN 4031582319804

Order number 00830807

Product Drawings

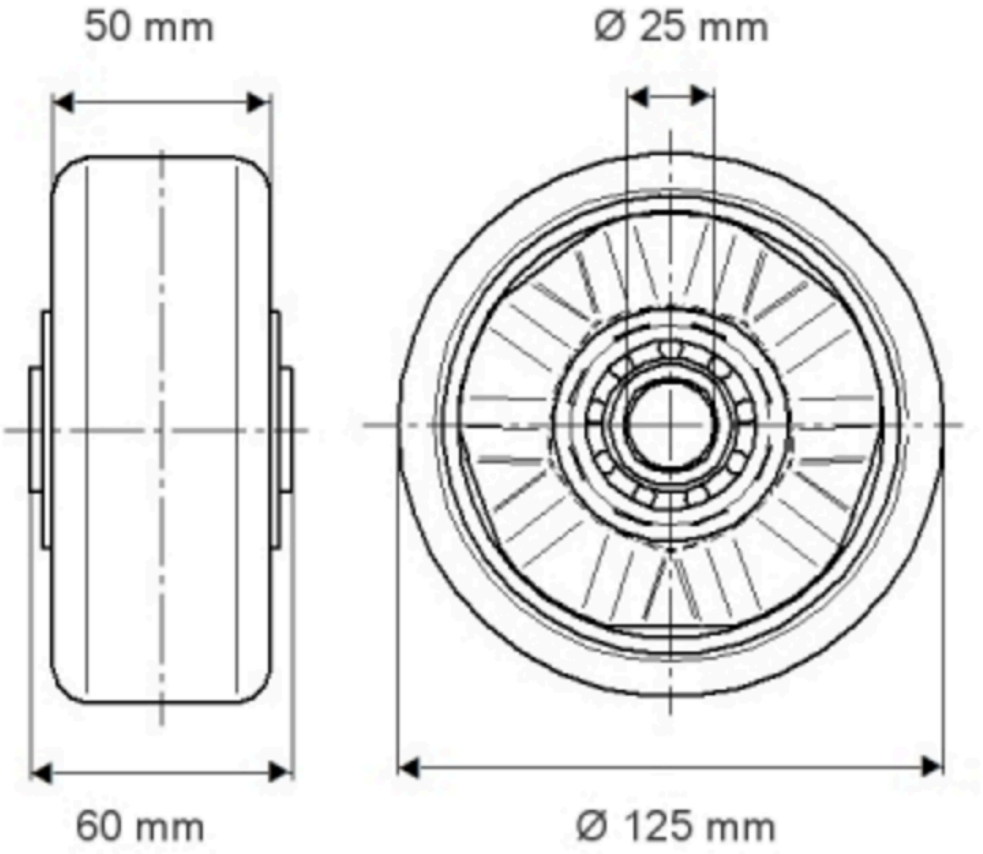

© Copyright 2026 TENTE International GmbH

ELASTECH

IFP125x50-Ø25

EAN 4031582319804

Order number 00330807

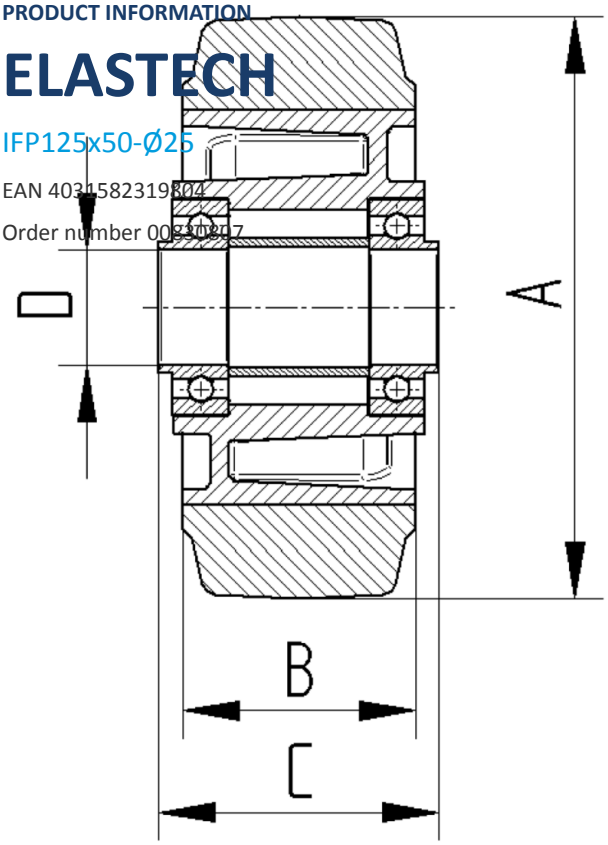

BETTER MOBILITY. BETTER LIFE.

© Copyright 2026 TENTE International GmbH