PRODUCT INFORMATION

KAPPA LOAD

9652TOO125P63

EAN 4031582348750



Image may differ from the original product

PERFORMANCE

Roll Performance	●●●●●
Movement noise	●○○○○
Attrition	●●●●●
Corrosion resistance	●●●○○

CORE ATTRIBUTES

Product name	Kappa load
Type	Swivel caster with total lock, head end of caster
Standard	EN12533 - Heavy Duty Castors
Load capacity at 2.5 mph	1851.88 lb
Load capacity at 3.7 mph	1543.23 lb
Electric conductive	no
Stainless	no
Load capacity Static	3703.76 lb
Temperature range (Minimum)	-40 °F
Temperature range (Maximum)	176 °F
Overall height	6.69 in

HOUSING

Housing Material	Cast iron, or iron forged, heavy
Fork shape	Broad, reinforced
Swivel bearing	Deep-groove ball thrust roller bearing
Offset	1.89 in
Swivel interference	8.7 in
Lubrication nipple	1

WHEEL

Body material	Polyamide, heavy
Tread material	Identical with wheel body
Bearing	Plain bearing
Axle	Screwed with nut
Threadguards	Without threadguard
Diameter	4.92 in
Tread width	1.97 in
Hardness of tread (D)	75 Shore D

FITTING

Fitting type	Rectangular plate
Plate length	5.31 in
Plate width	4.33 in
Plate hole length (Maximum)	4.13 in
Plate hole width (Minimum)	2.95 in
Plate hole width (Maximum)	3.15 in
Plate hole diameter	0.43 in

© Copyright 2026 TENTE International GmbH

KAPPA LOAD

9652TOO125P63

EAN 4031582348750

Order number 00838864

Product Drawings

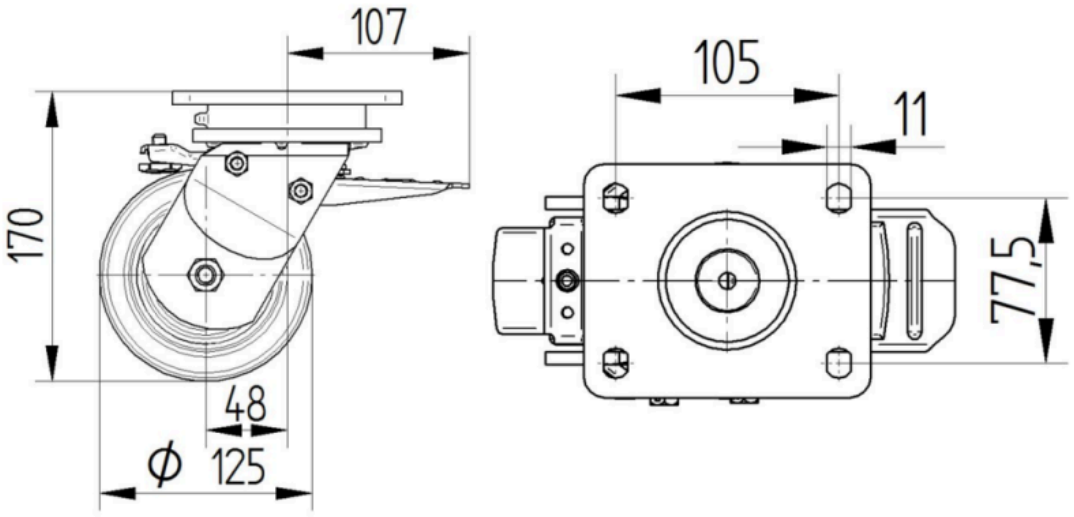

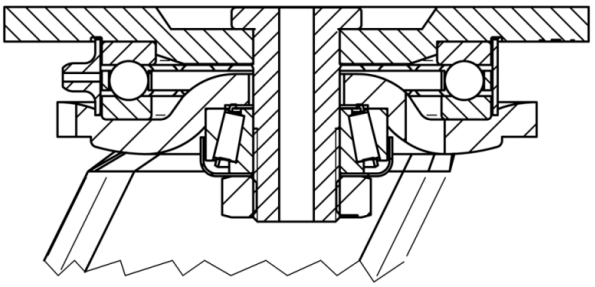

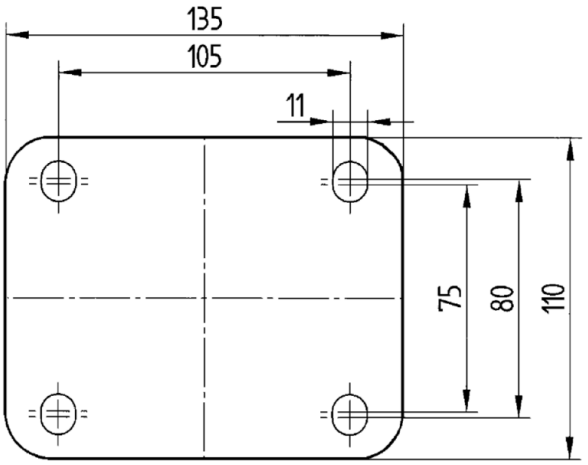

© Copyright 2026 TENTE International GmbH