PRODUCT INFORMATION

# AGILA TWIN

## 2970PJP075P50 offset-31,4 axle-M8

EAN 4031582302738

BETTER MOBILITY. BETTER LIFE.



Image may differ from the original product

### PERFORMANCE

| | |
|---|---|
| Roll Performance | ●●●○○ |
| Movement Noise | ●●●●○ |
| Attrition | ●●●○○ |
| Corrosion Resistance | ●●●○○ |

### CORE ATTRIBUTES

| | |
|---|---|
| Product Name | Agila twin |
| Type | Swivel castor |
| Standard | EN12530 - Devices Castors |
| Load capacity at 3 km/h | 100 kg |
| Electric Conductive | No |
| Stainless | No |
| Load capacity Static | 200 kg |
| Temperature range (Minimum) | -20 °C |
| Temperature range (Maximum) | 60 °C |
| Overall Height | 102 mm |
| Overall width | 71 mm |
| Overall weight | 0.63 kg |

### HOUSING

| | |
|---|---|
| Housing Material | Steel sheet, medium |
| Fork shape | Twin wheel housing |
| Swivel Bearing | Two ball races |
| Housing Color | Blue passivated |
| Offset | 31.4 mm |
| Swivel radius | 72.5 mm |
| Swivel interference | 145 mm |
| Dome diameter | 65 mm |

### WHEEL

| | |
|---|---|
| Body material | Polypropylene |
| Tread Material Mix | Thermoplastic rubber |
| Bearing | Precision ball bearing |
| Wheel Color | Silver grey (RAL7001) |
| Threadguards | With threadguard |
| Diameter | 75 mm |
| Tread width | 25 mm |
| Body width | 25 mm |
| Hardness of tread (A) | 87 Shore A |

### FITTING

| | |
|---|---|
| Fitting type | Rectangular plate |
| Plate length | 77 mm |
| Plate width | 67 mm |
| Plate hole length (Minimum) | 46.5 mm |
| Plate hole length (Maximum) | 51.5 mm |
| Plate hole width (Minimum) | 56 mm |
| Plate hole width (Maximum) | 61.5 mm |
| Plate hole diameter | 8.5 mm |

© Copyright 2026 TENTE International GmbH

# AGILA TWIN

2970PJP075P50 offset-31,4 axle-M8

EAN 4031582302738

Order number 00027436

**Product Drawings**

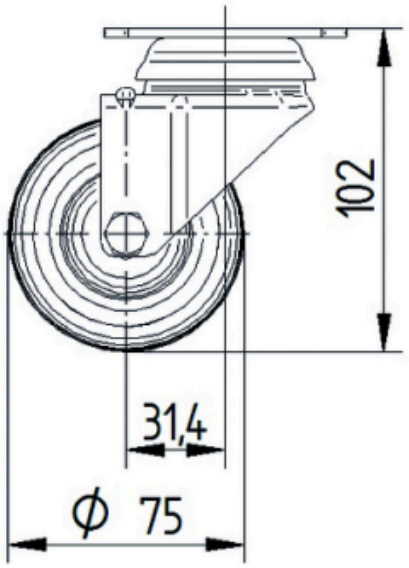


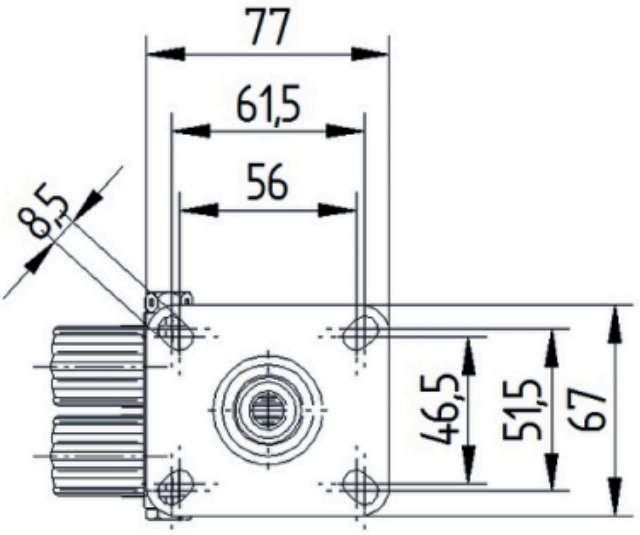


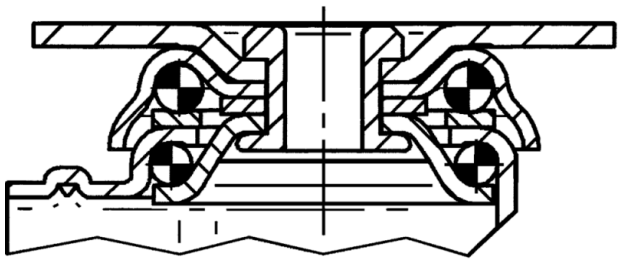

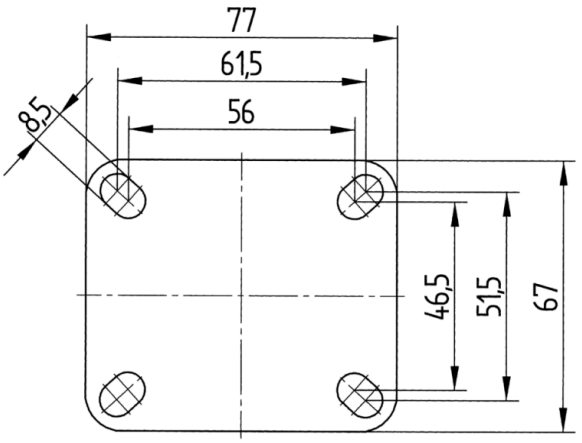


© Copyright 2026 TENTE International GmbH