PRODUCT INFORMATION

DURATECH

UOO050x20-Ø8 Natur

EAN 4031582447699



Image may differ from the original product

WHEEL

Body material	Polyamide
Tread material	Identical with wheel body
Bearing	Plain bearing
Threadguards	Without threadguard
Diameter	1.97 in
Tread width	0.79 in
Axle hole diameter	0.31 in
Hub length	0.85 in
Hardness of tread (D)	75 Shore D

PERFORMANCE

Roll Performance	●●●○○
Movement noise	●●●○○
Attrition	●●●●●
Corrosion resistance	●●●○○

CORE ATTRIBUTES

Product name	Duratech
Type	Wheel
Standard	EN12530 - Devices Castors
Load capacity at 1.8 mph	121.25 lb
Electric conductive	no
Stainless	no
Load capacity Static	242.51 lb
Temperature range (Minimum)	-40 °F
Temperature range (Maximum)	176 °F
Overall weight	0.04 lb

© Copyright 2026 TENTE International GmbH

DURATECH

UOO050x20-Ø8 Natur

EAN 4031582447699

BETTER MOBILITY. BETTER LIFE.

Product Drawings

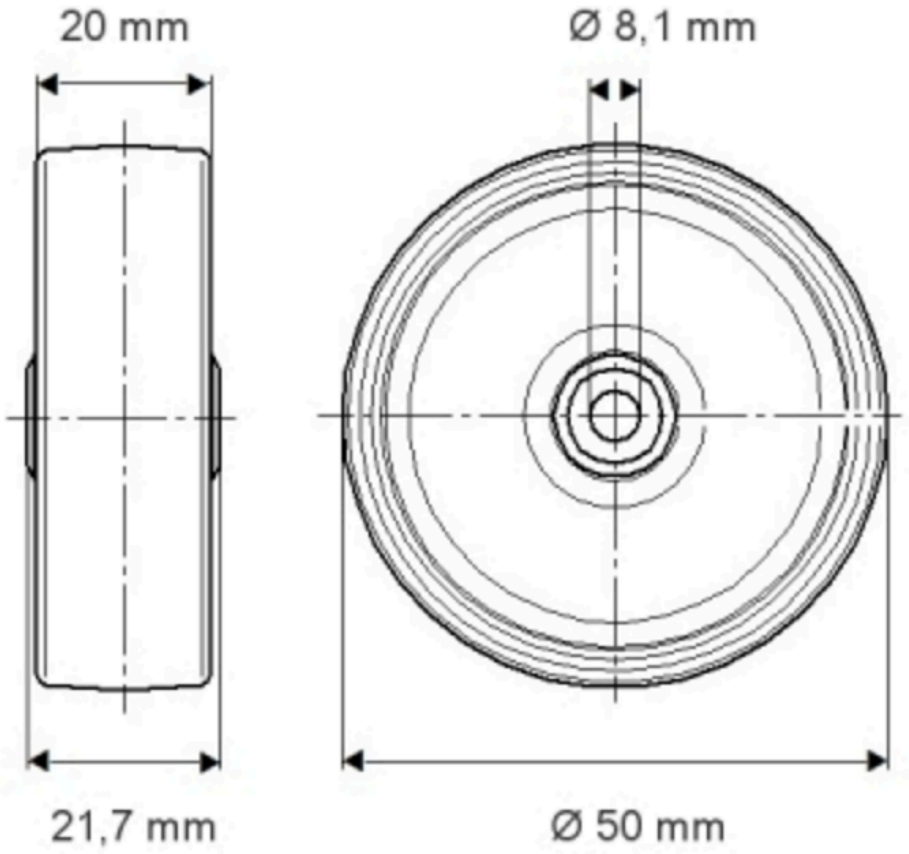

© Copyright 2026 TENTE International GmbH