PRODUCT INFORMATION

# DURATECH HEAT

## BOG080x35-Ø8 TFR

EAN 4031582392944

BETTER MOBILITY. BETTER LIFE.



Image may differ from the original product

### WHEEL

| | |
|---|---|
| Body material | Plastic thermoset, heat-resistant |
| Tread material | Identical with wheel body |
| Bearing | Dry bearing bush |
| Diameter | 3.15 in |
| Tread width | 1.38 in |
| Axle hole diameter | 0.31 in |
| Hub length | 1.77 in |
| Hardness of tread (D) | 85 Shore D |

### PERFORMANCE

| | |
|---|---|
| Roll Performance | ●●●○○ |
| Movement noise | ●●●○○ |
| Attrition | ●●●●● |
| Corrosion resistance | ●●●●● |

### CORE ATTRIBUTES

| | |
|---|---|
| Product name | Duratech heat |
| Type | Wheel |
| Standard | EN12532 - Transport Equipment |
| Load capacity at 2.5 mph | 220.46 lb |
| Electric conductive | no |
| Stainless | no |
| Load capacity Static | 440.92 lb |
| Temperature range (Minimum) | -40 °F |
| Temperature range (Maximum) | 536 °F |
| Overall weight | 0.4 lb |

© Copyright 2026 TENTE International GmbH

# DURATECH HEAT

BOG080x35-Ø8 TFR

EAN 4031582392944

BETTER MOBILITY. BETTER LIFE.

## Product Drawings

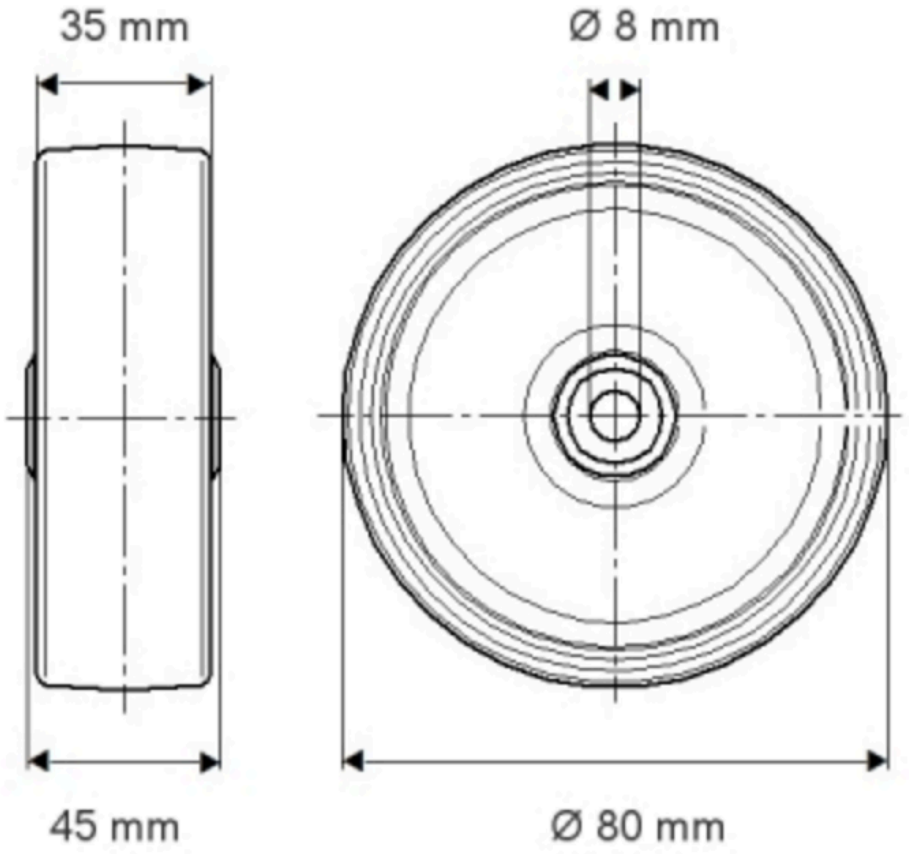


© Copyright 2026 TENTE International GmbH