PRODUCT INFORMATION

AGILA

2478YGO075P60-67x60

EAN 4031582342000

BETTER MOBILITY. BETTER LIFE.

Image may differ from the original product

PERFORMANCE

Roll Performance	●●●○○
Movement noise	●●●●○
Attrition	●●●○○
Corrosion resistance	●●●○○

CORE ATTRIBUTES

Product name	Agila
Type	Fixed caster
Standard	EN12530 - Devices Castors
Load capacity at 1.8 mph	165.35 lb
Electric conductive	Yes
Stainless	no
Load capacity Static	330.69 lb
Temperature range (Minimum)	-4 °F
Temperature range (Maximum)	140 °F
Overall height	3.94 in
Overall width	1.69 in
Overall weight	0.35 lb

HOUSING

Housing Material	Steel sheet, medium
Fork shape	Broad
Housing Color	Blue passivated
Dome diameter	1.69 in

WHEEL

Body material	Polypropylene, electric conductive
Tread material	Thermoplastic rubber, electric-conductive
Bearing	Plain bearing
Wheel color	Silver gray (similar RAL7001)
Threadguards	Without threadguard
Diameter	2.95 in
Tread width	0.98 in
Body width	0.98 in
Hardness of tread (A)	87 Shore A

FITTING

Fitting type	Rectangular plate
Plate length	2.64 in
Plate width	2.36 in
Plate hole length (Minimum)	1.57 in
Plate hole length (Maximum)	1.89 in
Plate hole width (Minimum)	1.57 in
Plate hole width (Maximum)	1.89 in
Plate hole diameter	0.25 in

© Copyright 2026 TENTE International GmbH

AGILA

2478YGO075P60-67x60

EAN 4031582342000

Order number 00029054

Product Drawings

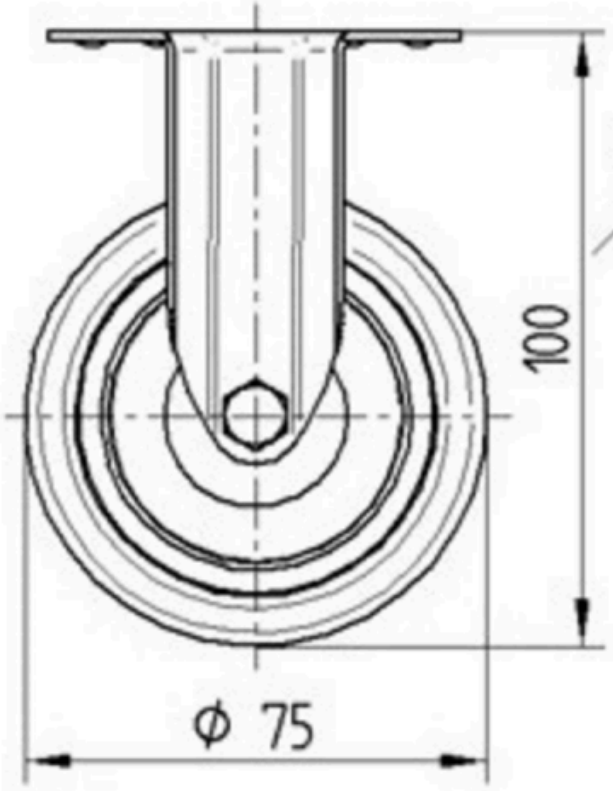

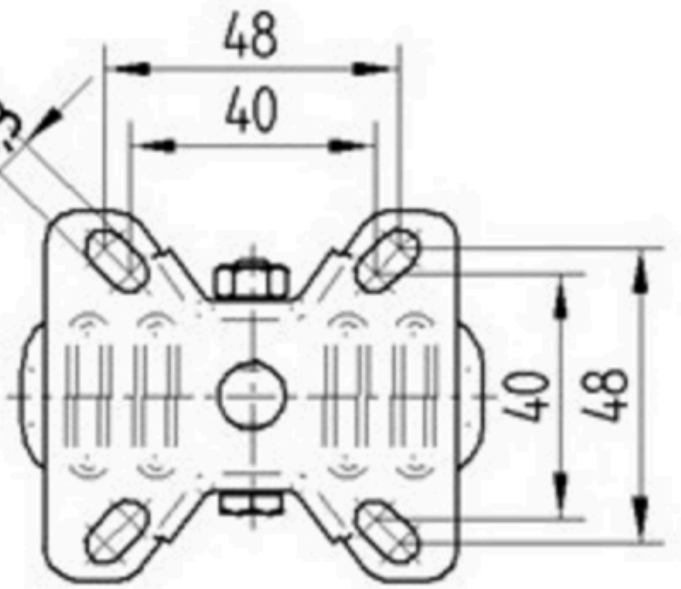

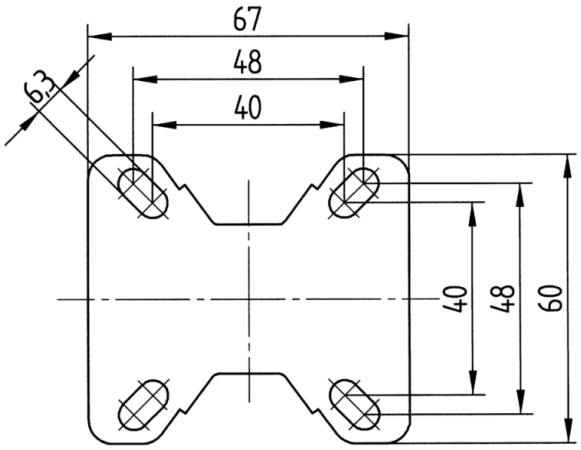

© Copyright 2026 TENTE International GmbH