PRODUCT INFORMATION

MAXTECH

UAR 125x32-Ø12 HL44 natural/3004

EAN 4031582323139



Image may differ from the original product

WHEEL

Body material	Polyamide
Tread material	Polyurethane, injected
Bearing	Roller bearing
Wheel color	Natural white
Threadguards	Without threadguard
Diameter	4.92 in
Tread width	1.26 in
Axle hole diameter	0.47 in
Hub length	1.73 in
Body width	1.26 in
Hardness of tread (A)	92 Shore A
Hardness of tread (D)	42 Shore D

PERFORMANCE

Roll Performance	●●●○○
Movement noise	●●●○○
Attrition	●●●●○
Corrosion resistance	●●●○○

CORE ATTRIBUTES

Product name	Maxtech
Type	Wheel
Standard	EN12532 - Transport Equipment
Load capacity at 2.5 mph	440.92 lb
Electric conductive	no
Stainless	no
Load capacity Static	881.85 lb
Temperature range (Minimum)	-13 °F
Temperature range (Maximum)	176 °F
Overall weight	0.59 lb

© Copyright 2026 TENTE International GmbH

MAXTECH

UAR 125x32-Ø12 HL44 natural/3004

EAN 4031582323139

Order number 00034174

Product Drawings

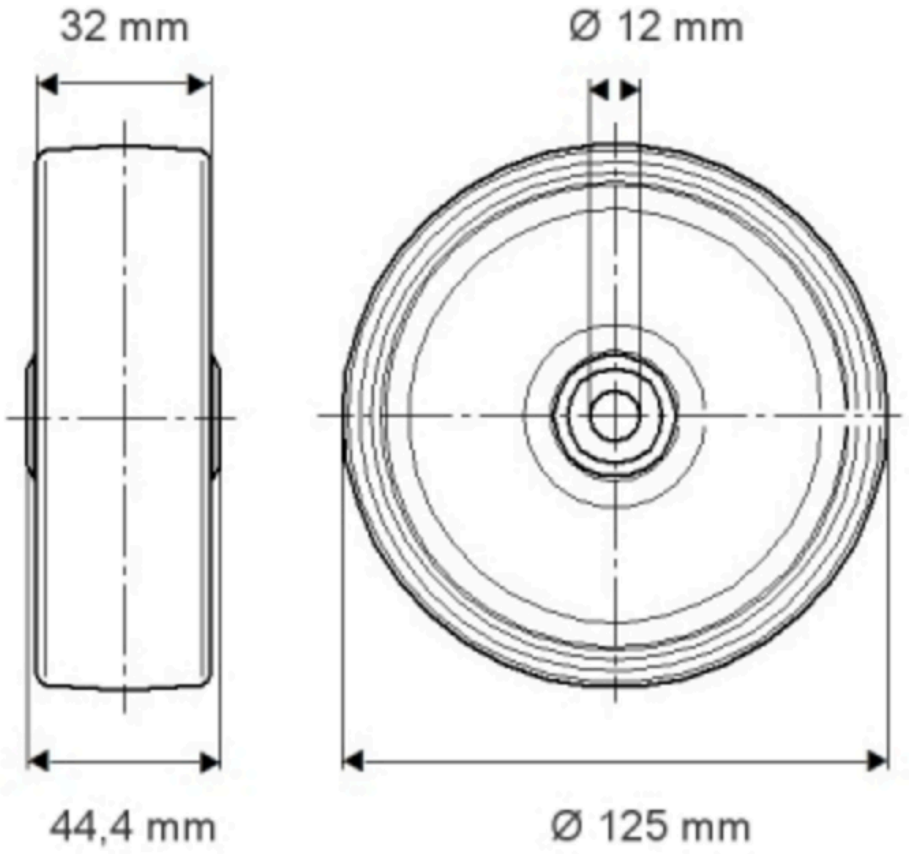

© Copyright 2026 TENTE International GmbH