PRODUCT INFORMATION

LUMINA

A523YGI050B10-11X20/10D45 9011/9011

EAN 4031582342055



Image may differ from the original product

PERFORMANCE

Roll Performance	●●●○○
Movement Noise	●●●○○
Attrition	●●●○○
Corrosion Resistance	●●●○○

CORE ATTRIBUTES

Product Name	Lumina
Type	Swivel castor with intermittend brake
Standard	EN12529 - Swivel Chairs Castors
Load capacity at 3 km/h	40 kg
Electric Conductive	Yes
Stainless	No
Load capacity Static	80 kg
Temperature range (Minimum)	-20 °C
Temperature range (Maximum)	60 °C
Overall Height	61 mm
Overall width	55 mm
Overall weight	0.11 kg

HOUSING

Housing Material	Polypropylene
Fork shape	Twin wheel housing, closed, with dome
Swivel Bearing	Stem, swiveling
Housing Color	Graphite black (RAL9011)
Offset	20 mm
Swivel radius	52 mm
Swivel interference	104 mm
Dome diameter	45 mm

WHEEL

Body material	Polypropylene, electric conductive
Tread Material Mix	Thermoplastic rubber, electric-conductive
Bearing	Plain bearing with spacer tube
Axle	Riveted
Tread Color	Graphite black (RAL9011)
Wheel Color	Graphite black (RAL9011)
Threadguards	Without threadguard
Diameter	50 mm
Tread width	8 mm
Axle Hole Diameter	0 mm
Hub Length	0 mm
Body width	8 mm
Hardness of tread (A)	87 Shore A

FITTING

Fitting type	Stem with grip ring, with collar
Stem diameter	11 mm
Stem length	20 mm

© Copyright 2026 TENTE International GmbH

LUMINA

A523YGI050B10-11X20/10D45 9011/9011

EAN 4031582342055

Order number 00078141

Product Drawings

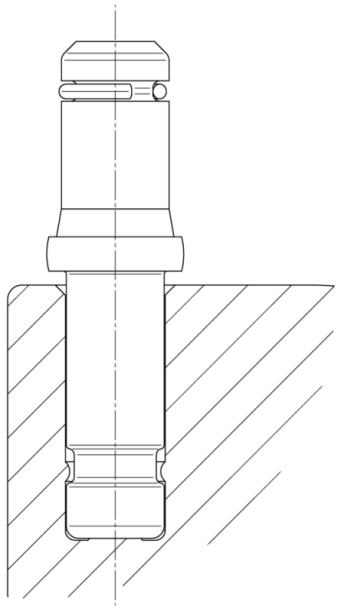

© Copyright 2026 TENTE International GmbH