PRODUCT INFORMATION

AGILA TWIN

2970PIP075P50

BETTER MOBILITY. BETTER LIFE.



Image may differ from the original product

PERFORMANCE

Roll Performance	●●●○○
Movement Noise	●●●○○
Attrition	●●●○○
Corrosion Resistance	●●●○○

CORE ATTRIBUTES

Product Name	Agila twin
Type	Swivel castor
Standard	EN12530 - Devices Castors
Load capacity at 3 km/h	80 kg
Electric Conductive	No
Stainless	No
Load capacity Static	160 kg
Temperature range (Minimum)	-20 °C
Temperature range (Maximum)	60 °C
Overall Height	102 mm
Overall weight	0.65 kg

HOUSING

Housing Material	Steel sheet, medium
Fork shape	Twin wheel housing
Swivel Bearing	Two ball races
Offset	31.4 mm
Swivel radius	68.9 mm
Swivel interference	137.8 mm

WHEEL

Tread hardness	soft
Body material	Polypropylene
Tread Material Mix	Solid rubber, non-marking
Bearing	Precision ball bearing
Threadguards	With threadguard
Diameter	75 mm
Tread width	25 mm
Hardness of tread (A)	75 Shore A

FITTING

Fitting type	Rectangular plate
Plate length	77 mm
Plate width	67 mm
Plate hole length (Minimum)	56 mm
Plate hole length (Maximum)	61.5 mm
Plate hole width (Minimum)	46.5 mm
Plate hole width (Maximum)	51.5 mm
Plate hole diameter	8.5 mm

© Copyright 2026 TENTE International GmbH

AGILA TWIN

2970PIP075P50

BETTER MOBILITY. BETTER LIFE.

Product Drawings

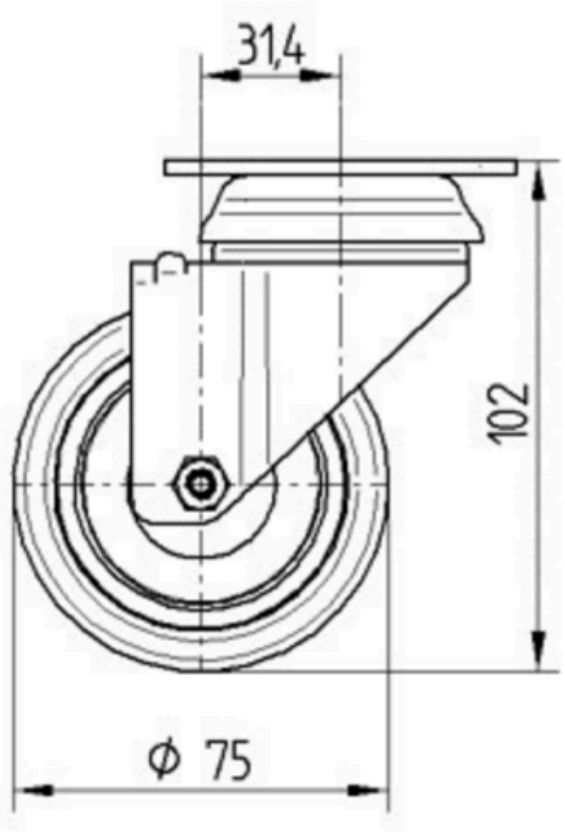

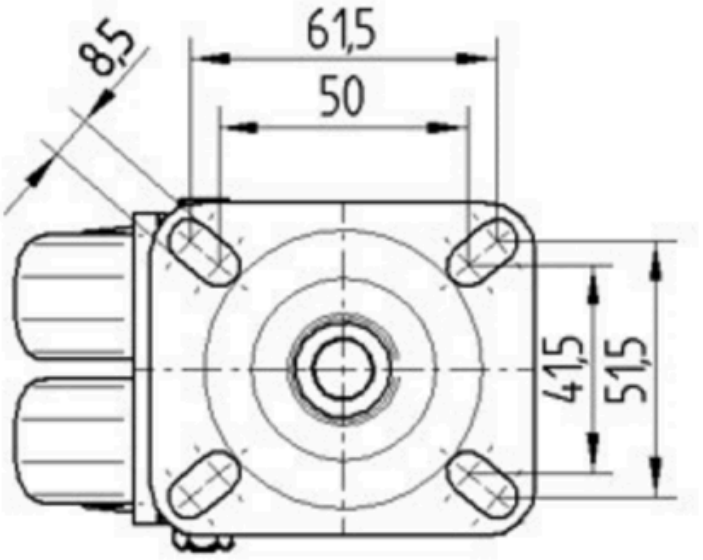

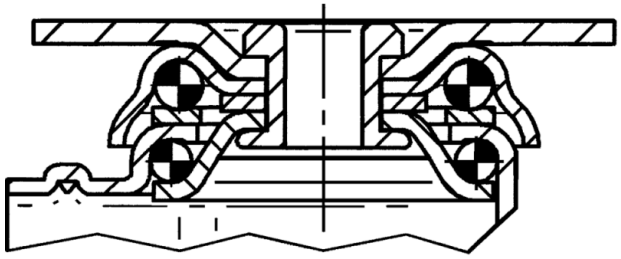

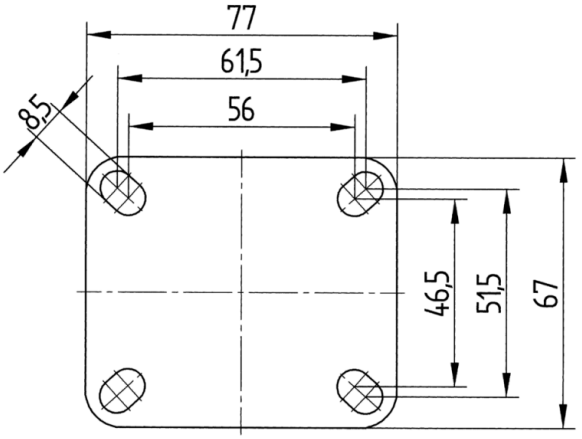

© Copyright 2026 TENTE International GmbH