PRODUCT INFORMATION

NOVATECH

FTX140x60-Ø12 HL65-A

EAN 4031582332070



Image may differ from the original product

WHEEL

Body material	Casting
Tread material	Polyurethane, casted
Bearing	Precision ball bearing, sealed
Threadguards	With threadguard
Diameter	5.51 in
Tread width	2.36 in
Axle hole diameter	0.47 in
Hub length	2.56 in
Hardness of tread (A)	92 Shore A
Bearing type	6006 2RS
Sealing type	A
Suitable for	bt_linde

PERFORMANCE

Roll Performance	●●●○○
Movement noise	●●●○○
Attrition	●●●●○
Corrosion resistance	●●●○○

CORE ATTRIBUTES

Product name	Novatech
Type	Wheel
Load capacity at 1.8 mph	1543.23 lb
Electric conductive	no
Stainless	no
Load capacity Static	3086.47 lb
Temperature range (Minimum)	-4 °F
Temperature range (Maximum)	140 °F
Overall weight	6.59 lb

© Copyright 2026 TENTE International GmbH

NOVATECH

FTX140x60-Ø12 HL65-A

EAN 4031582332070

BETTER MOBILITY. BETTER LIFE.

Product Drawings

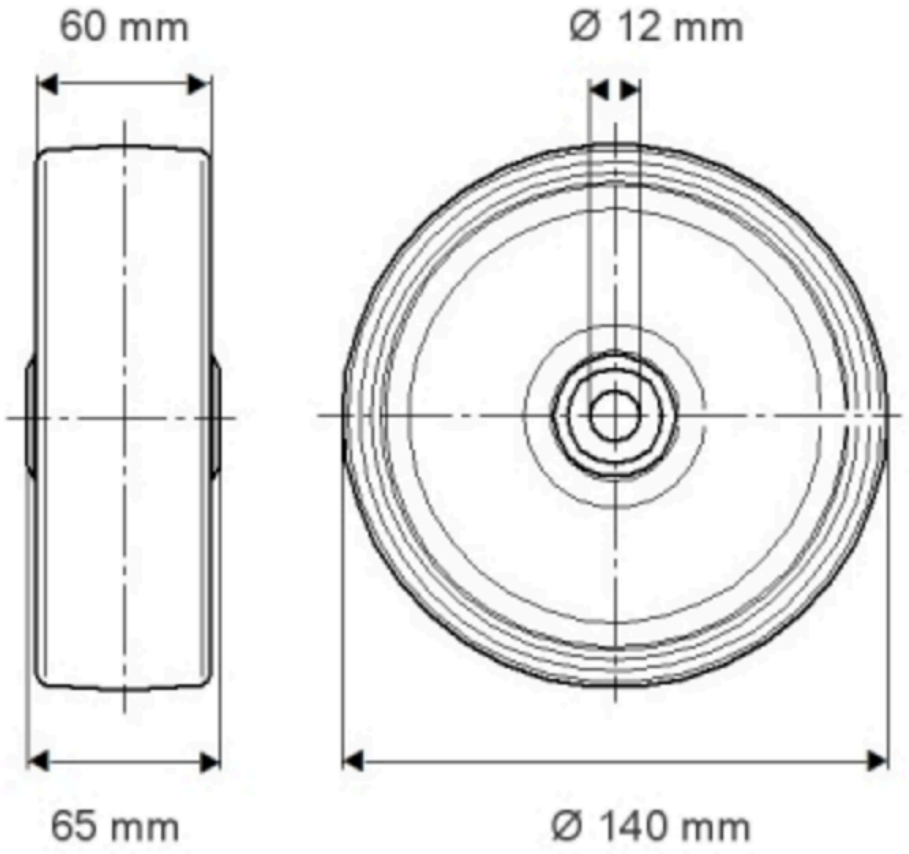

© Copyright 2026 TENTE International GmbH