PRODUCT INFORMATION

ZETA

4681TOP125P63

EAN 4031582308037



Image may differ from the original product

PERFORMANCE

Roll Performance	●●●○○
Movement noise	●●●○○
Attrition	●●●●○
Corrosion resistance	●●●○○

CORE ATTRIBUTES

Product name	Zeta
Type	Swivel caster with directional lock
Standard	EN12532 - Transport Equipment
Load capacity at 2.5 mph	1543.23 lb
Load capacity at 3.7 mph	1234.59 lb
Electric conductive	no
Stainless	no
Load capacity Static	3086.47 lb
Temperature range (Minimum)	-22 °F
Temperature range (Maximum)	176 °F
Overall height	6.46 in
Overall width	3.78 in
Overall weight	6.19 lb

HOUSING

Housing Material	Steel sheet, very heavy
Fork shape	Broad, reinforced
Swivel bearing	Two ball races, reinforced or stainless
Housing Color	Blue passivated
Offset	2.17 in
Swivel interference	9.06 in
Dome diameter	3.78 in

WHEEL

Body material	Polyamide, heavy
Tread material	Identical with wheel body
Bearing	Precision ball bearing
Axle	Screwed with nut
Wheel color	Natural white
Threadguards	Without threadguard
Diameter	4.92 in
Tread width	1.97 in
Body width	1.97 in
Hardness of tread (D)	75 Shore D

FITTING

Fitting type	Rectangular plate
Plate length	5.39 in
Plate width	4.13 in
Plate hole length (Minimum)	2.95 in
Plate hole length (Maximum)	3.15 in
Plate hole width (Minimum)	2.95 in
Plate hole width (Maximum)	4.13 in
Plate hole diameter	0.43 in

© Copyright 2026 TENTE International GmbH

ZETA

4681TOP125P63

EAN 4031582308037

Order number 00806261

Product Drawings

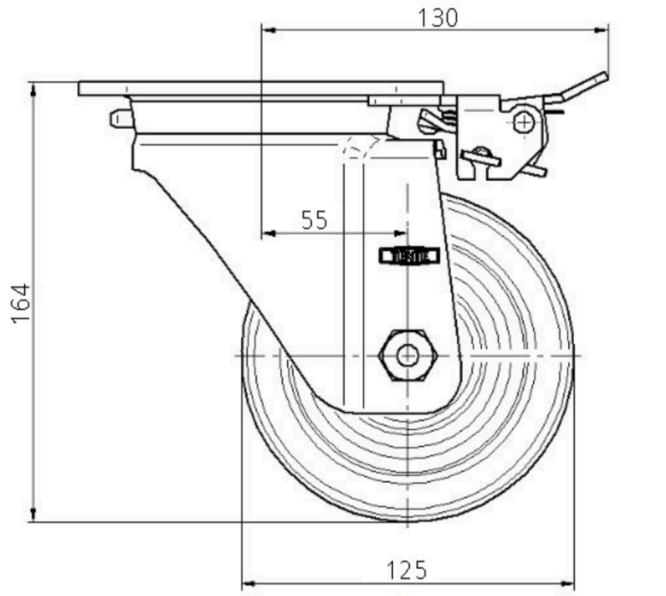

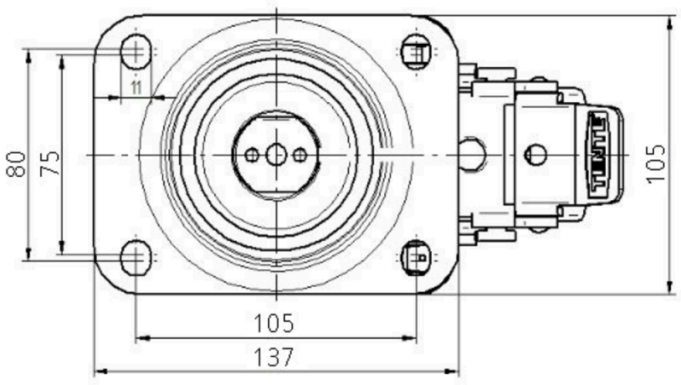

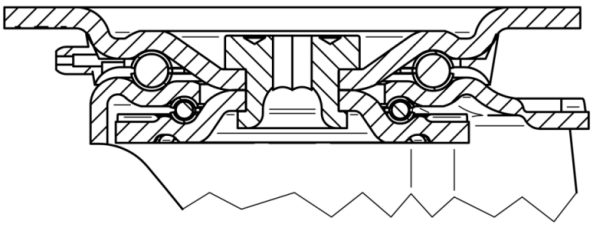

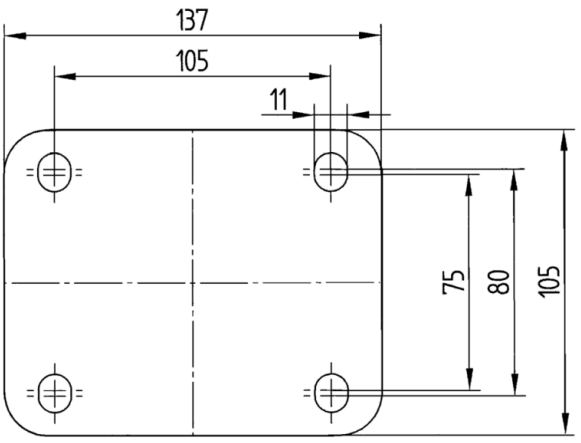

© Copyright 2026 TENTE International GmbH