PRODUCT INFORMATION

KAPPA LOAD

9652ITP160P63 CL67 cv

EAN 4031582367188



Image may differ from the original product

PERFORMANCE

Roll Performance	●●●●○
Movement noise	●●●○○
Attrition	●●●●○
Corrosion resistance	●●●●○

CORE ATTRIBUTES

Product name	Kappa load
Type	Swivel caster with total lock, head end of caster
Standard	EN12532 - Transport Equipment
Load capacity at 2.5 mph	1763.7 lb
Load capacity at 3.7 mph	1410.96 lb
Electric conductive	no
Stainless	no
Load capacity Static	3527.39 lb
Temperature range (Minimum)	14 °F
Temperature range (Maximum)	140 °F
Overall height	8.07 in
Overall width	4.57 in
Overall weight	9.6 lb

HOUSING

Housing Material	Cast iron, or iron forged, heavy
Fork shape	Broad, reinforced
Swivel bearing	Deep-groove ball thrust roller bearing
Housing Color	Blue passivated
Offset	2.28 in
Swivel radius	5.51 in
Swivel interference	11.02 in
Lubrication nipple	1
Dome diameter	4.37 in

WHEEL

Tread profile	convex
Body material	Aluminum
Tread material	Polyurethane, casted
Bearing	Precision ball bearing
Axle	Screwed with nut
Wheel color	Honey yellow (RAL1005)
Threadguards	Without threadguard
Diameter	6.3 in
Tread width	1.97 in
Body width	1.97 in
Hardness of tread (A)	92 Shore A
Hardness of tread (D)	42 Shore D

FITTING

Fitting type	Rectangular plate
Plate length	5.31 in
Plate width	4.33 in
Plate hole length (Minimum)	2.95 in
Plate hole length (Maximum)	3.15 in
Plate hole width (Minimum)	2.95 in
Plate hole width (Maximum)	4.13 in
Plate hole diameter	0.43 in

© Copyright 2026 TENTE International GmbH

KAPPA LOAD

9652ITP160P63 CL67 cv

EAN 4031582367188

Order number 00838842

Product Drawings

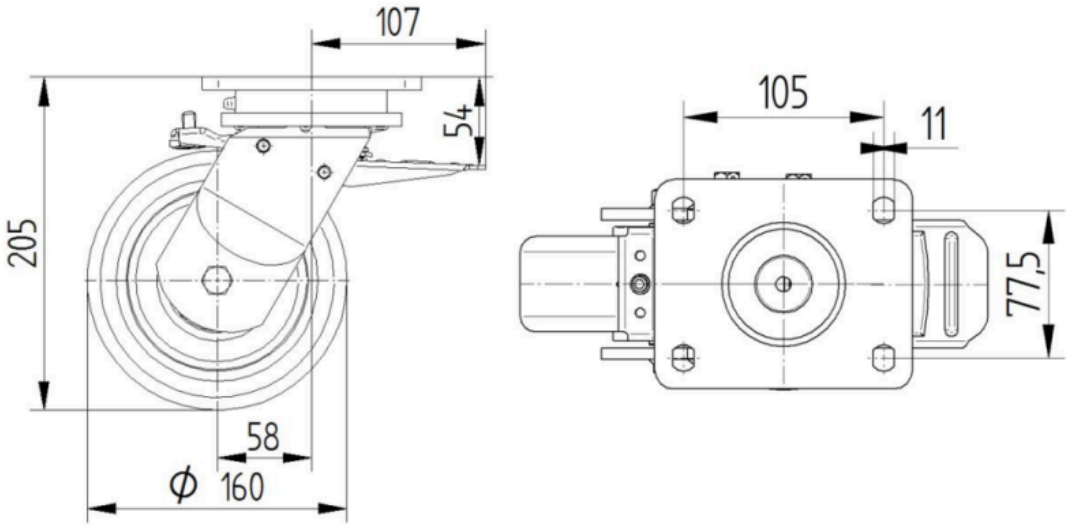

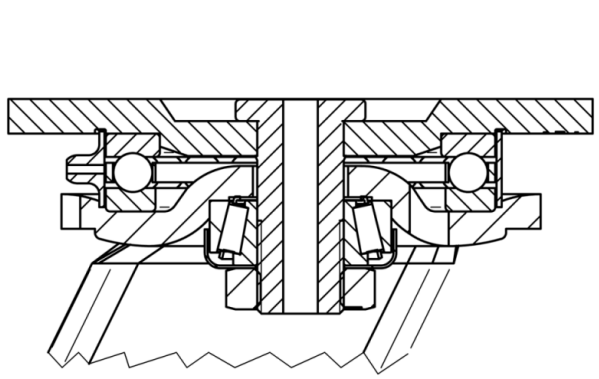

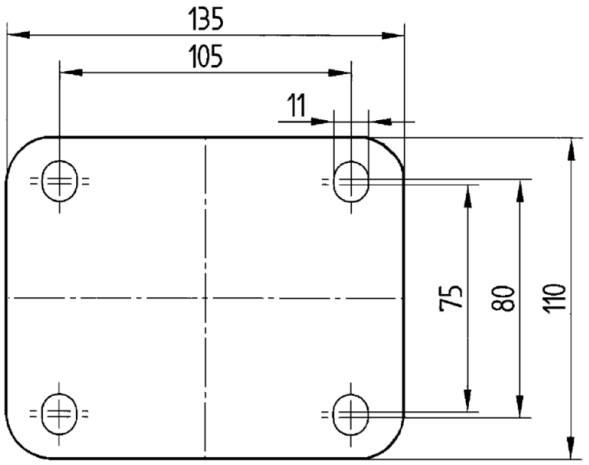

© Copyright 2026 TENTE International GmbH