PRODUCT INFORMATION

PURETECH

DVR100x30-Ø8x45,5 + ASBUS

EAN 4031582372892



Image may differ from the original product

WHEEL

Body material	Sheet Steel
Tread Material Mix	Solid rubber, black
Bearing	Roller bearing
Threadguards	Without threadguard
Diameter	100 mm
Tread width	30 mm
Axle Hole Diameter	8 mm
Hub Length	45.5 mm
Hardness of tread (A)	85 Shore A

PERFORMANCE

Roll Performance	●●●○○
Movement Noise	●●●○○
Attrition	●●○○○
Corrosion Resistance	●●●○○

CORE ATTRIBUTES

Product Name	Puretech
Type	Wheel
Standard	EN12532 - Transport Equipment
Load capacity at 4 km/h	70 kg
Electric Conductive	No
Stainless	No
Load capacity Static	140 kg
Temperature range (Minimum)	-20 °C
Temperature range (Maximum)	60 °C
Overall weight	0.24 kg

© Copyright 2026 TENTE International GmbH

PURETECH

DVR100x30-Ø8x45,5 + ASBUS

EAN 4031582372892

BETTER MOBILITY. BETTER LIFE.

Product Drawings

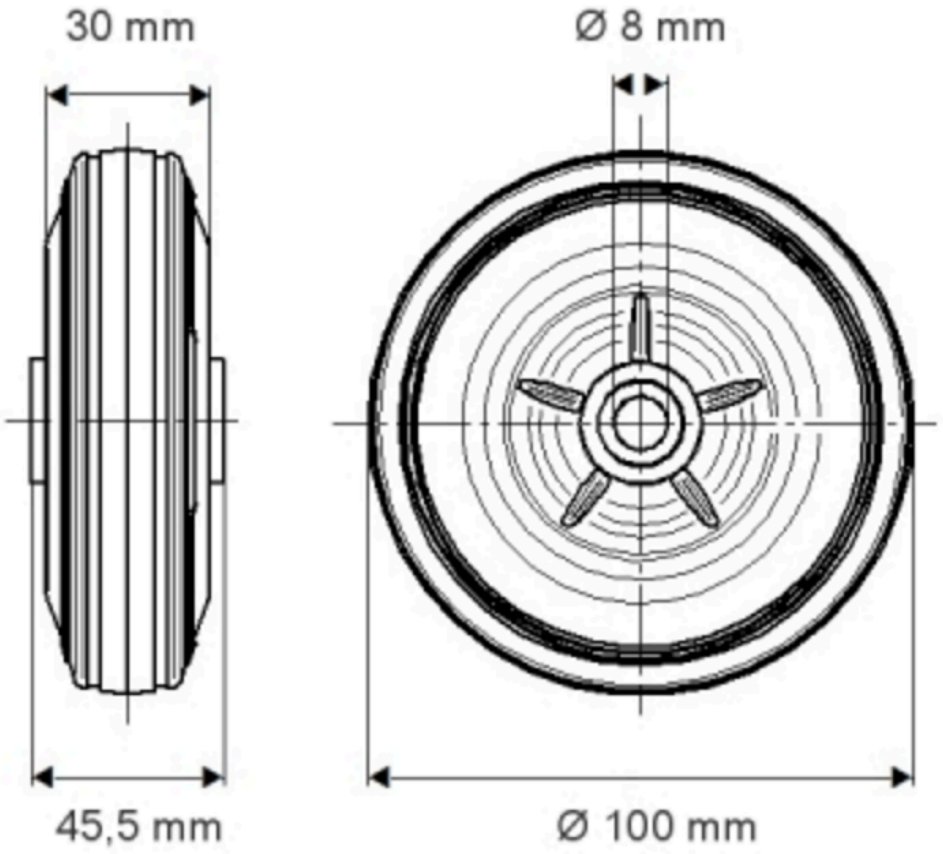

© Copyright 2026 TENTE International GmbH