PRODUCT INFORMATION

ALPHA

3470DPR200P63

EAN 4031582439168



Image may differ from the original product

PERFORMANCE

Roll Performance	● ○ ○ ○ ○
Movement noise	● ● ● ○ ○
Attrition	● ● ● ○ ○
Corrosion resistance	● ● ● ○ ○

CORE ATTRIBUTES

Product name	Alpha
Type	Swivel caster
Load capacity at 1.8 mph	165.35 lb
Electric conductive	no
Stainless	no
Load capacity Static	330.69 lb
Overall height	9.45 in
Overall weight	4.71 lb

HOUSING

Housing Material	Steel sheet, heavy
Fork shape	Broad
Swivel bearing	Two ball races
Housing Color	Blue passivated
Offset	2.17 in
Swivel radius	6.1 in
Swivel interference	12.2 in

WHEEL

Body material	Sheet Steel
Tread material	Pneumatic tire, line profile
Bearing	Roller bearing
Axle	Screwed with nut
Threadguards	Without threadguard
Diameter	7.87 in
Tread width	1.97 in

FITTING

Fitting type	Rectangular plate
Plate length	5.39 in
Plate width	4.13 in
Plate hole length (Maximum)	4.13 in
Plate hole width (Minimum)	2.95 in
Plate hole width (Maximum)	3.15 in
Plate hole diameter	0.43 in

© Copyright 2026 TENTE International GmbH

ALPHA

3470DPR200P63

EAN 4031582439168

BETTER MOBILITY. BETTER LIFE.

Product Drawings

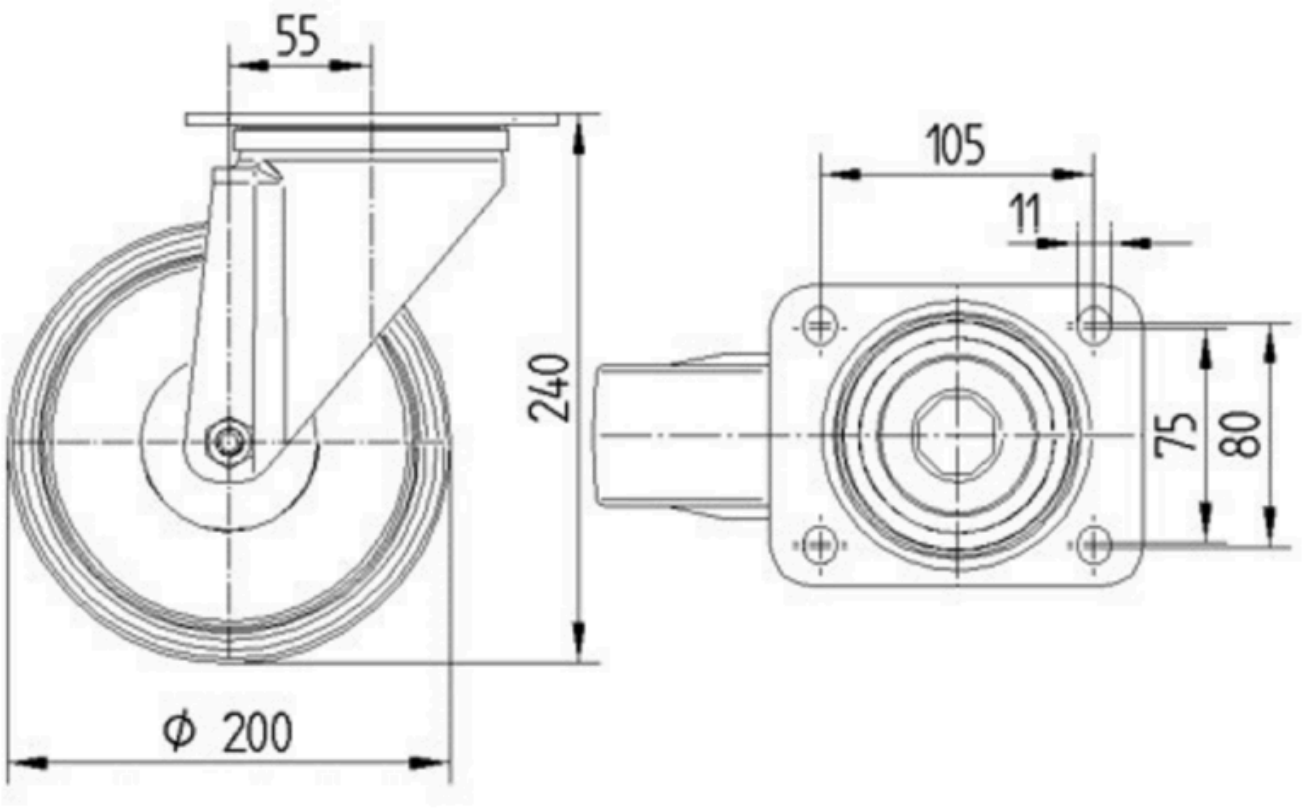

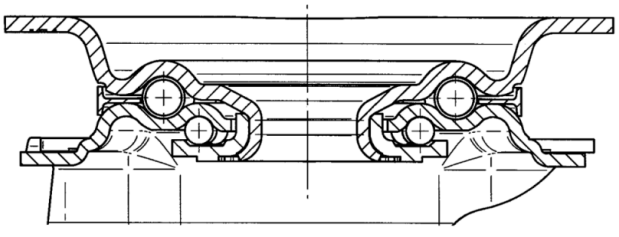

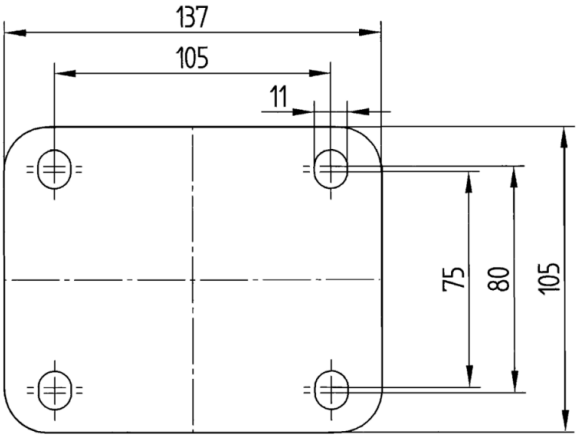

© Copyright 2026 TENTE International GmbH