PRODUCT INFORMATION

NOVATECH

FTP250x50-Ø25 HL62

EAN 4031582331035



Image may differ from the original product

WHEEL

Body material	Casting
Tread material	Polyurethane, casted
Bearing	Precision ball bearing
Threadguards	With threadguard
Diameter	9.84 in
Tread width	1.97 in
Axle hole diameter	0.98 in
Hub length	2.44 in
Hardness of tread (A)	92 Shore A

PERFORMANCE

Roll Performance	●●●●○
Movement noise	●●●○○
Attrition	●●●●○
Corrosion resistance	●●●○○

CORE ATTRIBUTES

Product name	Novatech
Type	Wheel
Standard	EN12533 - Heavy Duty Castors
Load capacity at 2.5 mph	3174.65 lb
Load capacity at 3.7 mph	2645.54 lb
Electric conductive	no
Stainless	no
Load capacity Static	6349.31 lb
Temperature range (Minimum)	-4 °F
Temperature range (Maximum)	140 °F

© Copyright 2026 TENTE International GmbH

NOVATECH

FTP250x50-Ø25 HL62

EAN 4031582331035

BETTER MOBILITY. BETTER LIFE.

Product Drawings

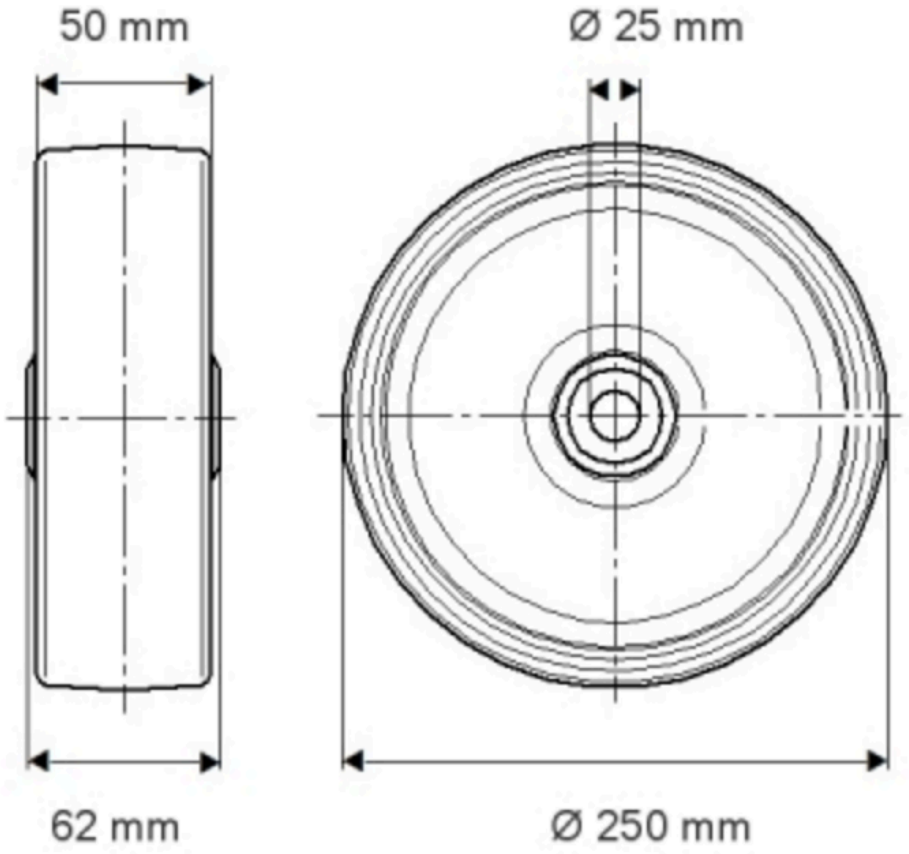

© Copyright 2026 TENTE International GmbH

NOVATECH

FTP250x50-Ø25 HL62

EAN 4031582331035

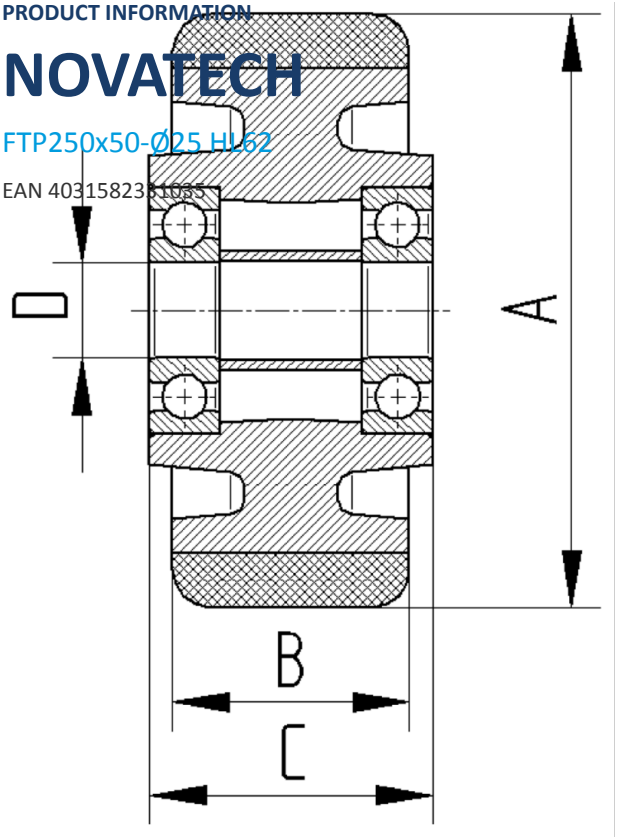

BETTER MOBILITY. BETTER LIFE.

© Copyright 2026 TENTE International GmbH