PRODUCT INFORMATION

PURETECH

DVR160x40-Ø12x59 + ASBUS

EAN 4031582372915

BETTER MOBILITY. BETTER LIFE.



Image may differ from the original product

WHEEL

Body material	Sheet Steel
Tread Material Mix	Solid rubber, black
Bearing	Roller bearing
Threadguards	Without threadguard
Diameter	160 mm
Tread width	40 mm
Axle Hole Diameter	12 mm
Hub Length	59 mm
Hardness of tread (A)	85 Shore A

PERFORMANCE

Roll Performance	●●●○○
Movement Noise	●●●○○
Attrition	●●○○○
Corrosion Resistance	●●●○○

CORE ATTRIBUTES

Product Name	Puretech
Type	Wheel
Standard	EN12532 - Transport Equipment
Load capacity at 4 km/h	160 kg
Electric Conductive	No
Stainless	No
Load capacity Static	320 kg
Temperature range (Minimum)	-20 °C
Temperature range (Maximum)	60 °C
Overall weight	0.59 kg

© Copyright 2026 TENTE International GmbH

PURETECH

DVR160x40-Ø12x59 + ASBUS

EAN 4031582372915

BETTER MOBILITY. BETTER LIFE.

Product Drawings

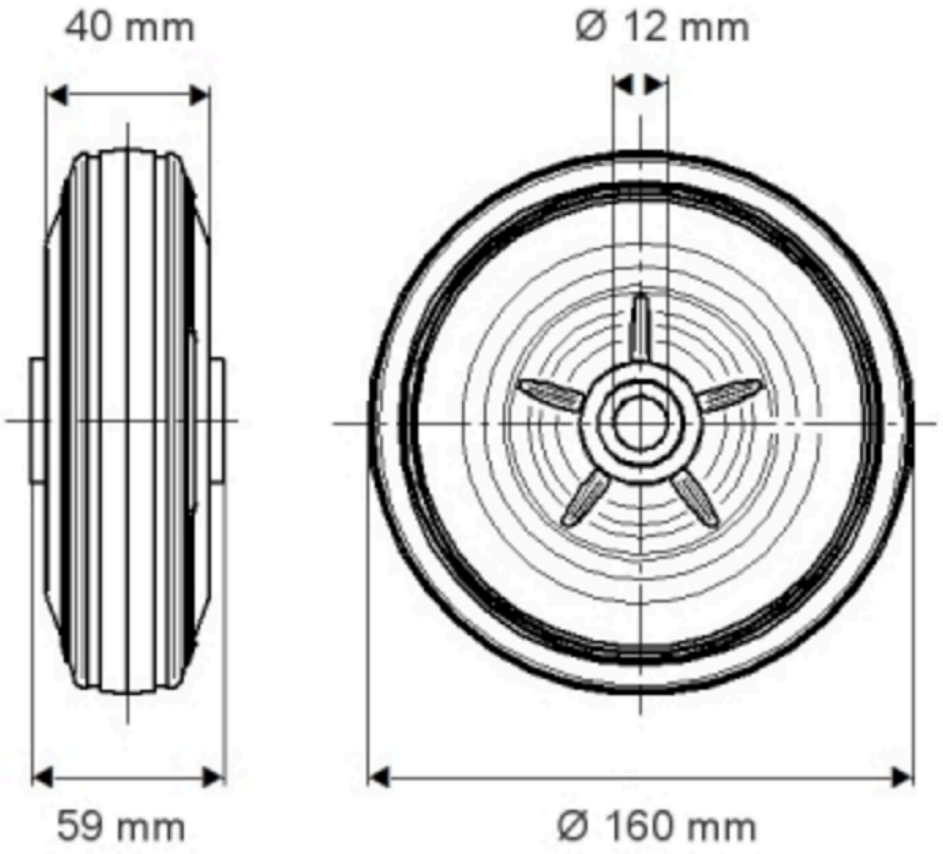

© Copyright 2026 TENTE International GmbH