PRODUCT INFORMATION

# AGILA

## 2477PJO150P30-13

EAN 4031582365221

BETTER MOBILITY. BETTER LIFE.



Image may differ from the original product

### PERFORMANCE

| | |
|---|---|
| Roll Performance | ●●●○○ |
| Movement noise | ●●●○○ |
| Attrition | ●●●○○ |
| Corrosion resistance | ●●●○○ |

### CORE ATTRIBUTES

| | |
|---|---|
| Product name | Agila |
| Type | Swivel caster with total lock |
| Standard | EN12530 - Devices Castors |
| Load capacity at 1.8 mph | 220.46 lb |
| Electric conductive | no |
| Stainless | no |
| Load capacity Static | 440.92 lb |
| Temperature range (Minimum) | -4 °F |
| Temperature range (Maximum) | 140 °F |
| Overall height | 7.28 in |
| Overall weight | 1.98 lb |

### HOUSING

| | |
|---|---|
| Housing Material | Steel sheet, medium |
| Fork shape | Broad |
| Swivel bearing | Two ball races |
| Housing Color | Blue passivated |
| Offset | 1.42 in |
| Swivel radius | 5.16 in |
| Swivel interference | 10.31 in |

### WHEEL

| | |
|---|---|
| Body material | Polypropylene |
| Tread material | Thermoplastic rubber |
| Bearing | Plain bearing |
| Threadguards | Without threadguard |
| Diameter | 5.91 in |
| Tread width | 1.18 in |
| Hardness of tread (A) | 87 Shore A |

### FITTING

| | |
|---|---|
| Fitting type | Bolt hole |
| Bolt hole diameter | 0.51 in |
| Hint | Castors can be mounted with standard screws of any length. |

© Copyright 2026 TENTE International GmbH

# AGILA

2477PJO150P30-13

EAN 4031582365221

BETTER MOBILITY. BETTER LIFE.

## Product Drawings

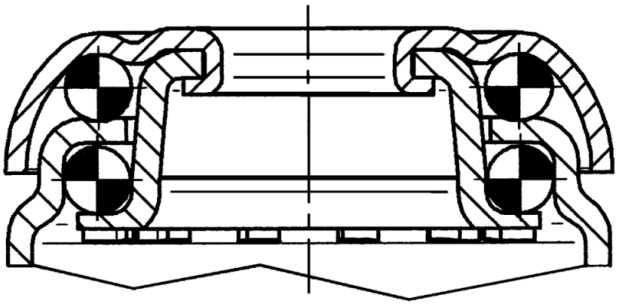

© Copyright 2026 TENTE International GmbH