PRODUCT INFORMATION

LINEA

5941UAC100P30-11 RAL9002

EAN 4031582352634

BETTER MOBILITY. BETTER LIFE.



Image may differ from the original product

PERFORMANCE

Roll Performance	●●●●●
Movement Noise	●●●○○
Attrition	●●●●○
Corrosion Resistance	●●●●○

CORE ATTRIBUTES

Product Name	Linea
Type	Swivel castor with directional lock
Standard	EN12530 - Devices Castors
Load capacity at 3 km/h	120 kg
Electric Conductive	No
Stainless	Yes
Load capacity Static	240 kg
Temperature range (Minimum)	-10 °C
Temperature range (Maximum)	40 °C
Overall Height	118 mm
Overall width	82 mm
Overall weight	0.73 kg

HOUSING

Housing Material	Polyamide
Fork shape	Twin wheel housing
Swivel Bearing	Precision ball bearing
Housing Color	Grey white (RAL9002)
Offset	32 mm
Swivel radius	108 mm
Swivel interference	216 mm
Dome diameter	52 mm

WHEEL

Body material	Polyamide
Tread Material Mix	Polyurethane, injected
Bearing	Precision ball bearing, stainless
Threadguards	With threadguard
Diameter	100 mm
Tread width	20 mm
Hardness of tread (A)	92 Shore A

FITTING

Fitting type	Bolt hole
Bolt hole diameter	11 mm

Deutscher Designer Club

Interzum Award

IF Design Award

© Copyright 2026 TENTE International GmbH

LINEA

5941UAC100P30-11 RAL9002

EAN 4031582352634

BETTER MOBILITY. BETTER LIFE.

Product Drawings

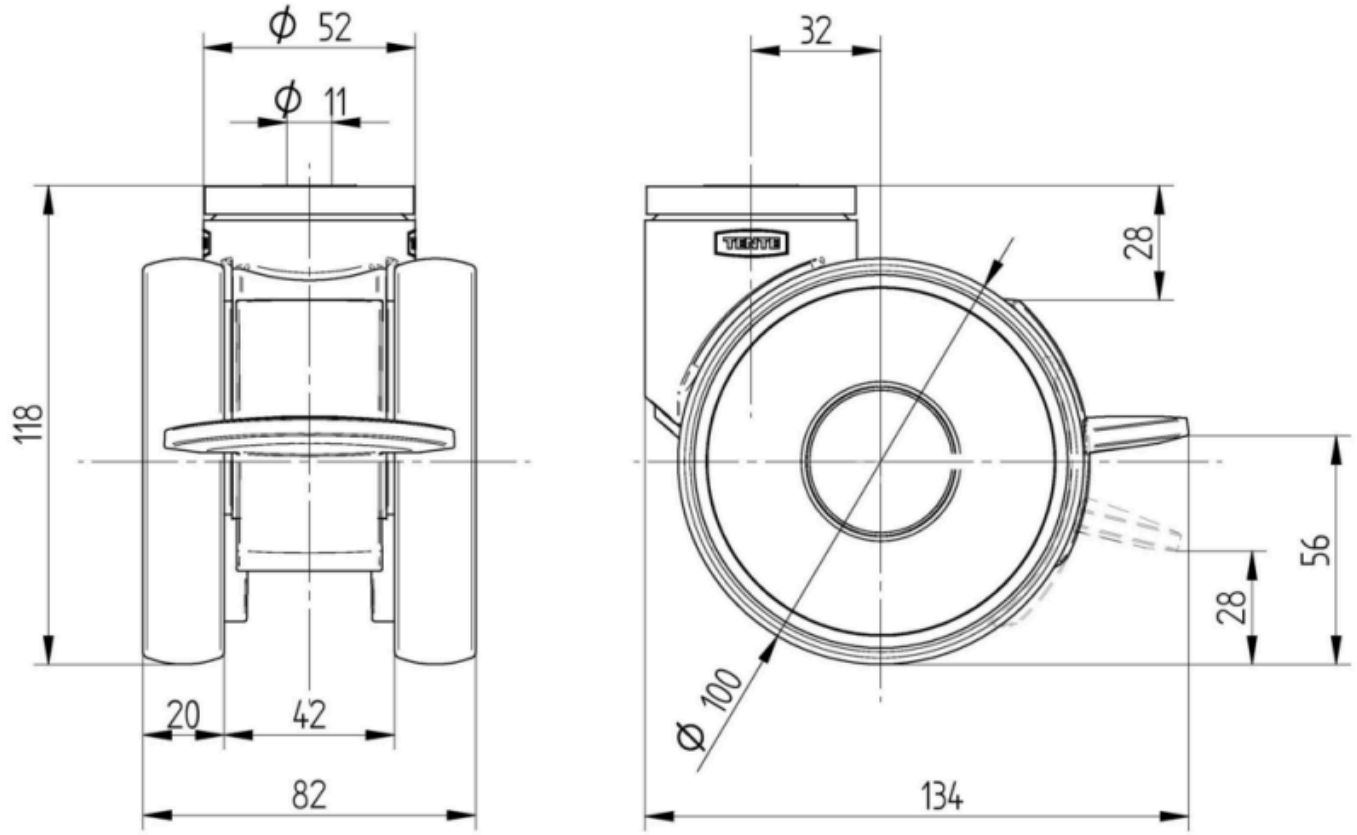

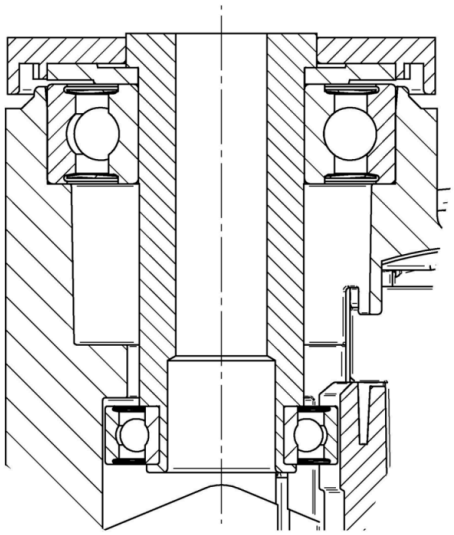

Deutscher Designer Club

Interzum Award

IF Design Award

© Copyright 2026 TENTE International GmbH