PURETECH

Directional lock 4681/125-250 P63 XL

EAN 4031582438147

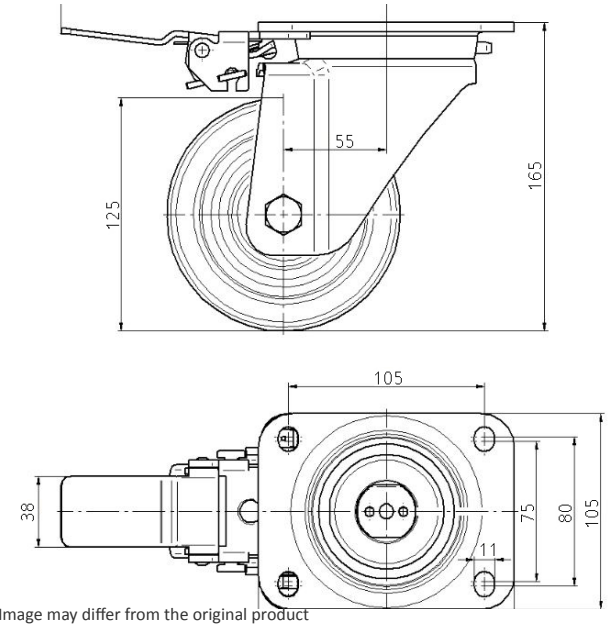

Image may differ from the original product

PERFORMANCE

Roll Performance	●●●○○
Movement Noise	●●●○○
Attrition	●●●○○
Corrosion Resistance	●●●○○

CORE ATTRIBUTES

Product Name	Puretech
Type	Accessory
Electric Conductive	No
Stainless	No
Overall weight	0.27 kg

© Copyright 2026 TENTE International GmbH