PRODUCT INFORMATION

# AGILA

## 2477UAP125R07-Ø31-35

EAN 4031582327199



Image may differ from the original product

### PERFORMANCE

| | |
|---|---|
| Roll Performance | ●●●○○ |
| Movement noise | ●●●○○ |
| Attrition | ●●●●○ |
| Corrosion resistance | ●●●○○ |

### CORE ATTRIBUTES

| | |
|---|---|
| Product name | Agila |
| Type | Swivel caster with total lock |
| Standard | EN12530 - Devices Castors |
| Load capacity at 1.8 mph | 220.46 lb |
| Electric conductive | no |
| Stainless | no |
| Load capacity Static | 440.92 lb |
| Temperature range (Minimum) | 14 °F |
| Temperature range (Maximum) | 104 °F |
| Overall height | 6.42 in |

### HOUSING

| | |
|---|---|
| Housing Material | Steel sheet, medium |
| Fork shape | Broad |
| Swivel bearing | Two ball races |
| Housing Color | Blue passivated |
| Offset | 1.61 in |
| Swivel radius | 5.16 in |
| Swivel interference | 10.31 in |

### WHEEL

| | |
|---|---|
| Body material | Polyamide |
| Tread material | Polyurethane, injected |
| Bearing | Precision ball bearing |
| Threadguards | With threadguard |
| Diameter | 4.92 in |
| Tread width | 1.26 in |
| Hardness of tread (D) | 40 Shore D |

### FITTING

| | |
|---|---|
| Fitting type | Synthetic expander, round |
| Expander fitting (Minimum) | 1.22 in |
| Expander fitting (Maximum) | 1.38 in |
| Hint | Please indicate required tube innerdiameter when ordering. |

© Copyright 2026 TENTE International GmbH

# AGILA

2477UAP125R07-Ø31-35

EAN 4031582327199

BETTER MOBILITY. BETTER LIFE.

## Product Drawings

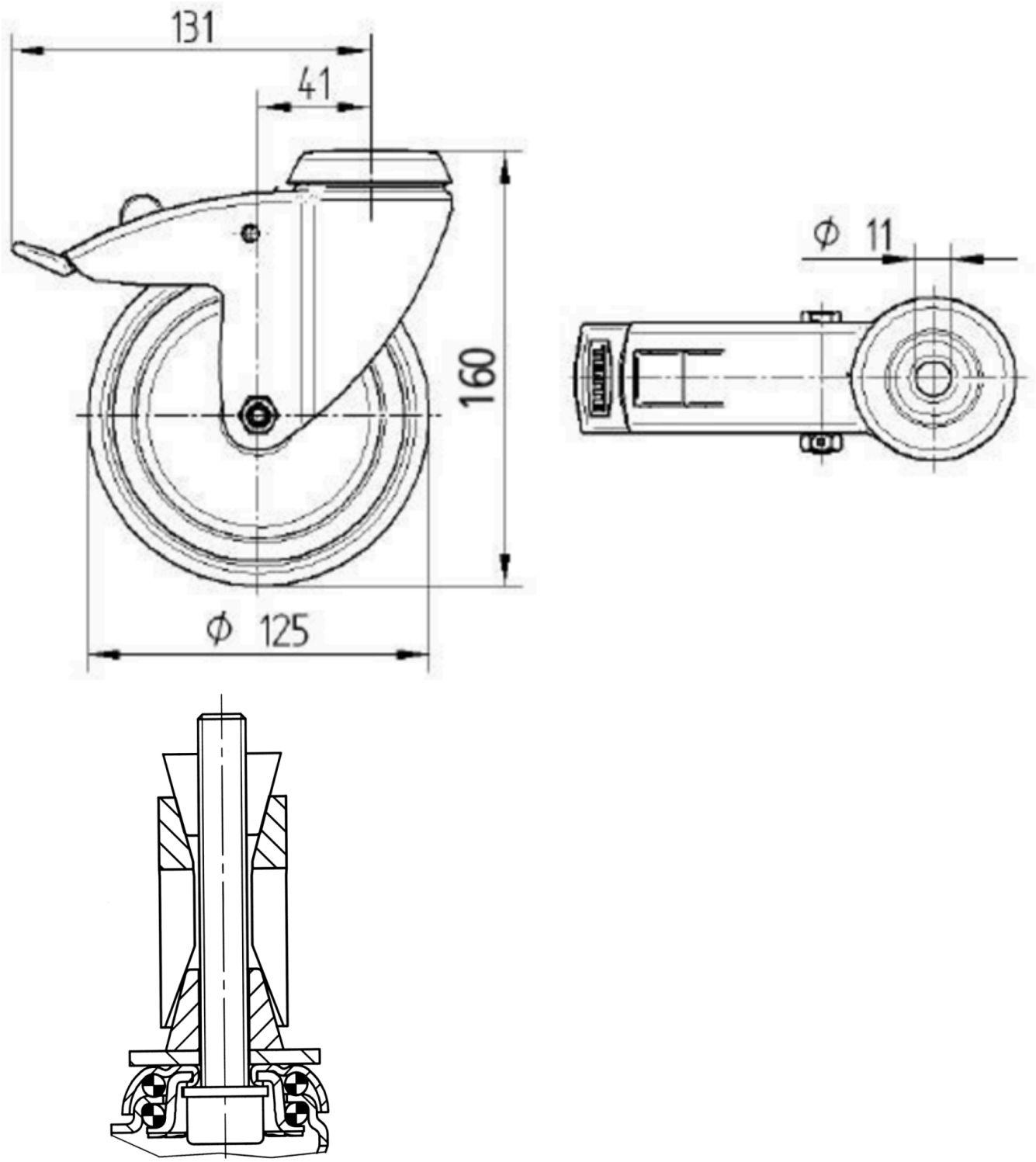


© Copyright 2026 TENTE International GmbH