PRODUCT INFORMATION

LINEA E-LOCK

594EUSP150R36-32 N 9002 ro

Order number 00065310



Image may differ from the original product

PERFORMANCE

Roll Performance	●●●●●
Movement Noise	●●●●○
Attrition	●●●●○
Corrosion Resistance	●●●○○

CORE ATTRIBUTES

Product Name	Linea E-Lock
Type	Swivel castor with electric locking system
Standard	EN12531 - Hospital Bed Castors
Load capacity at 3 km/h	150 kg
Load capacity at 4 km/h	150 kg
Electric Conductive	Yes
Stainless	Yes
Load capacity Static	450 kg
Temperature range (Minimum)	-10 °C
Temperature range (Maximum)	40 °C
Overall Height	155 mm
Overall width	71 mm
Overall weight	1.52 kg

HOUSING

Housing Material	Polyamide
Fork shape	Twin wheel housing
Swivel Bearing	Precision ball bearing
Housing Color	Grey white (RAL9002)
Offset	47.5 mm
Swivel radius	127 mm
Swivel interference	254 mm
Dome diameter	45.5 mm

WHEEL

Body material	Polyamide
Tread Material Mix	Polyurethane, injected, electric-conductive
Bearing	Precision ball bearing
Wheel Color	Grey white (RAL9002)
Threadguards	With threadguard
Diameter	150 mm
Tread width	15 mm
Body width	15 mm
Hardness of tread (A)	92 Shore A
Hardness of tread (D)	42 Shore D

FITTING

Fitting type	Stem with cam hole for profile bars, short version
Bolt diameter	32 mm
Bolt length	50 mm
Bolt thread position	7 mm
Bolt mounting holes quantity	2

Deutscher Designer Club

Interzum Award

IF Design Award

© Copyright 2026 TENTE International GmbH

LINEA E-LOCK

594EUSP150R36-32 N 9002 ro

Order number 00065310

BETTER MOBILITY. BETTER LIFE.

Product Drawings

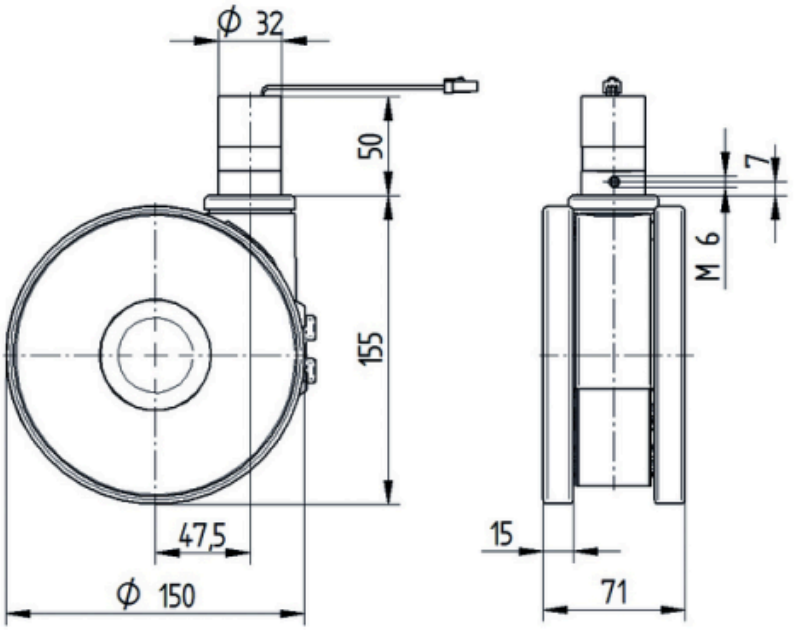

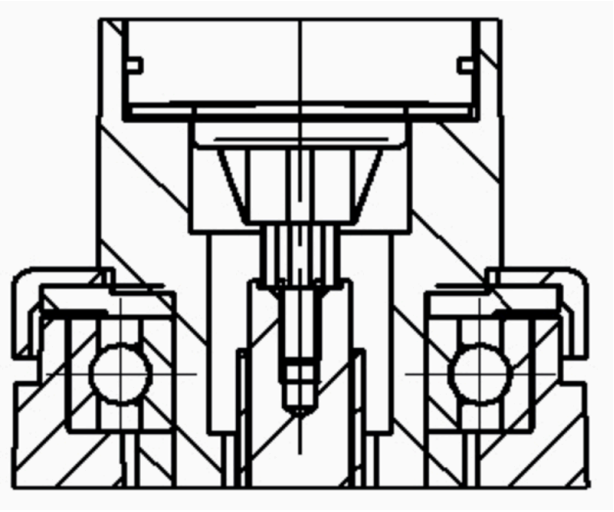

© Copyright 2026 TENTE International GmbH