PRODUCT INFORMATION

NOVATECH

ITP150x50-Ø25-SH80A convex

EAN 4031582329537



Image may differ from the original product

WHEEL

Tread profile	convex
Body material	Aluminium
Tread Material Mix	PUR casted premium
Bearing	Precision ball bearing
Threadguards	Without threadguard
Diameter	150 mm
Tread width	50 mm
Axle Hole Diameter	25 mm
Hub Length	60 mm
Hardness of tread (A)	80 Shore A

PERFORMANCE

Roll Performance	●●●○○
Movement Noise	●●●○○
Attrition	●●●●○
Corrosion Resistance	●●●○○

CORE ATTRIBUTES

Product Name	Novatech
Type	Wheel
Standard	EN12532 - Transport Equipment
Load capacity at 4 km/h	500 kg
Load capacity at 6 km/h	400 kg
Electric Conductive	No
Stainless	No
Load capacity Static	1000 kg
Temperature range (Minimum)	-10 °C
Temperature range (Maximum)	60 °C

© Copyright 2026 TENTE International GmbH

NOVATECH

ITP150x50-Ø25-SH80A convex

EAN 4031582329537

BETTER MOBILITY. BETTER LIFE.

Product Drawings

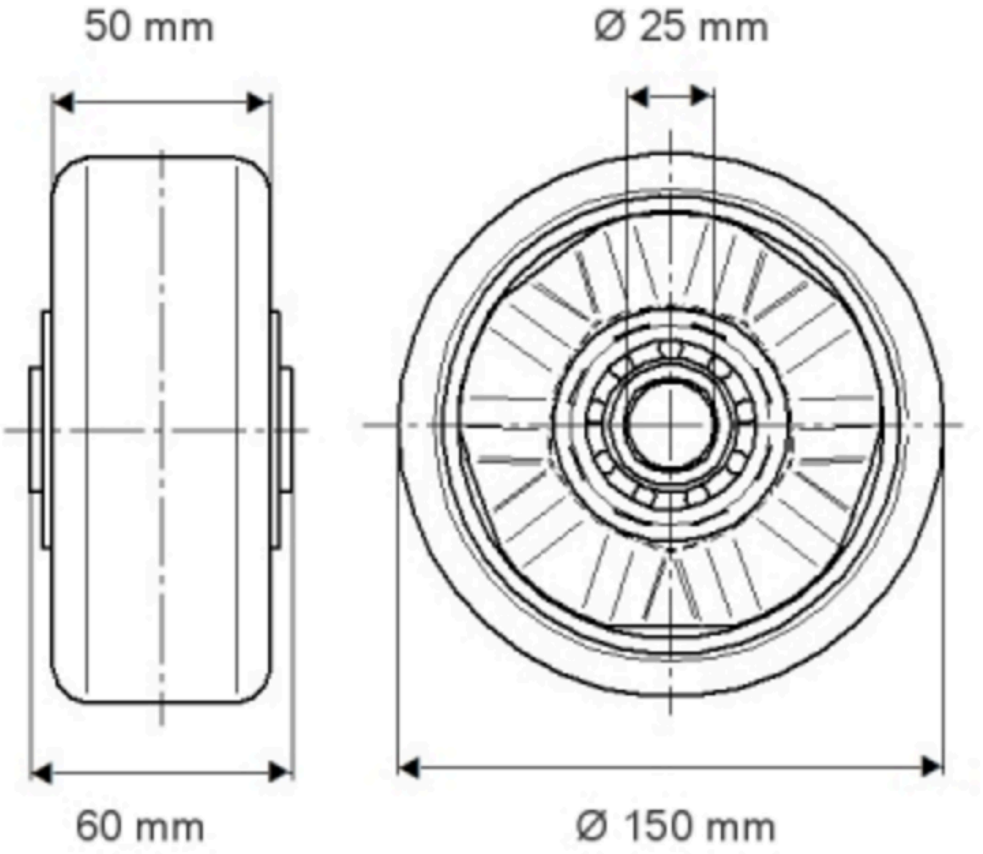

© Copyright 2026 TENTE International GmbH

NOVATECH

ITP150x50-Ø25-SH80A convex

EAN 4031582329537

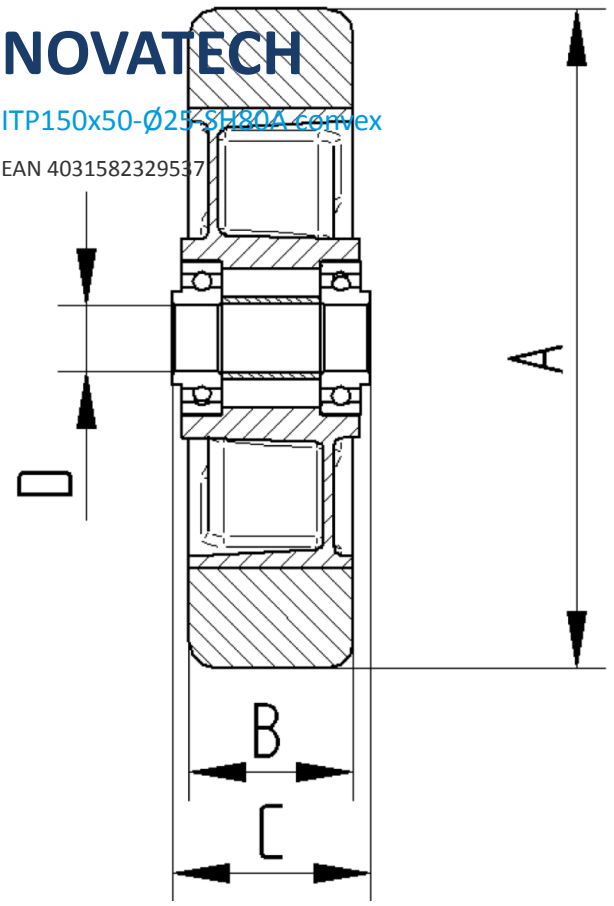

BETTER MOBILITY. BETTER LIFE.

© Copyright 2026 TENTE International GmbH