PRODUCT INFORMATION

ANIKA

5925UAI055L51-10

EAN 4031582406405

BETTER MOBILITY. BETTER LIFE.



Image may differ from the original product

PERFORMANCE

Roll Performance	●●●○○
Movement Noise	●●●○○
Attrition	●●●○○
Corrosion Resistance	●●●●○

CORE ATTRIBUTES

Product Name	Anika
Type	Swivel castor with wheel brake
Standard	EN12528 - Furniture Castors
Load capacity at 3 km/h	40 kg
Electric Conductive	No
Stainless	No
Load capacity Static	80 kg
Temperature range (Minimum)	-10 °C
Temperature range (Maximum)	40 °C
Overall Height	57 mm
Overall width	37 mm
Overall weight	0.65 kg

HOUSING

Housing Material	Polyamide
Fork shape	Twin wheel housing
Swivel Bearing	Stem, swiveling
Swivel radius	64 mm
Swivel interference	128 mm
Dome diameter	18 mm

WHEEL

Body material	Polyamide
Tread Material Mix	Polyurethane, injected
Bearing	Plain bearing with spacer tube
Axle	Riveted
Threadguards	Without threadguard
Diameter	55 mm
Tread width	11 mm
Hardness of tread (A)	92 Shore A

FITTING

Fitting type	Blind hole for B10
Bolt hole diameter	10 mm

interzum Interzum Award

© Copyright 2026 TENTE International GmbH

ANIKA

5925UAI055L51-10

EAN 4031582406405

TENTE
BETTER MOBILITY. BETTER LIFE.

Product Drawings

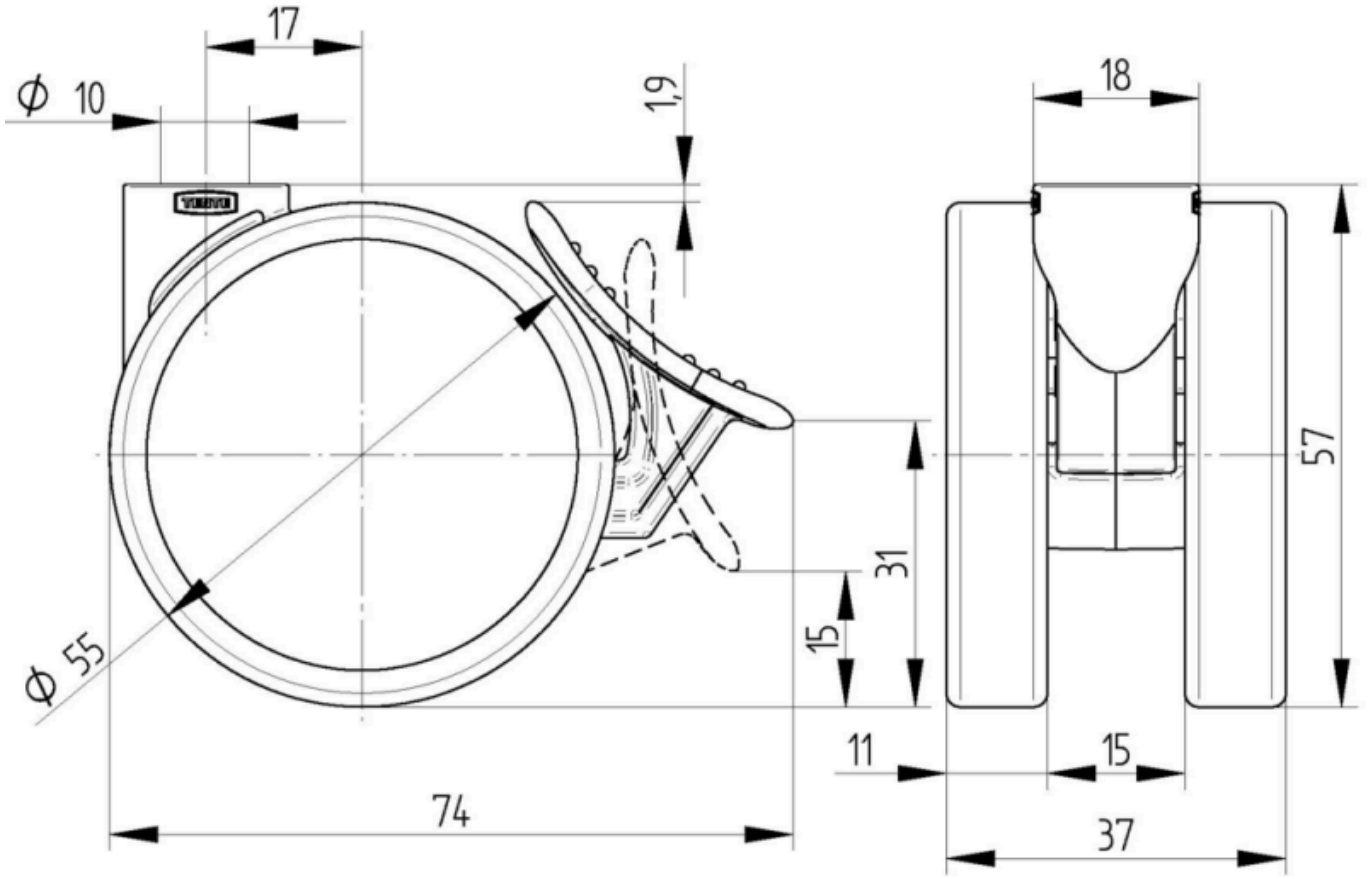

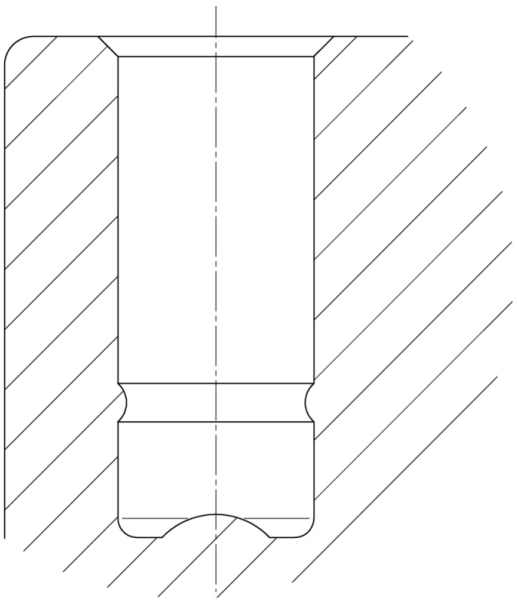

Interzum Award

© Copyright 2026 TENTE International GmbH