PRODUCT INFORMATION

LUMINA

6A20YGI050L51-8

EAN 4031582311334

BETTER MOBILITY. BETTER LIFE.



Image may differ from the original product

PERFORMANCE

Roll Performance	●●●○○
Movement noise	●●●○○
Attrition	●●●○○
Corrosion resistance	●●●○○

CORE ATTRIBUTES

Product name	Lumina
Type	Swivel caster
Standard	EN12528 - Furniture Castors
Load capacity at 1.8 mph	88.18 lb
Electric conductive	Yes
Stainless	no
Load capacity Static	176.37 lb
Temperature range (Minimum)	14 °F
Temperature range (Maximum)	104 °F
Overall height	2.13 in
Overall width	2.17 in
Overall weight	0.31 lb

HOUSING

Housing Material	Zinc-die-casting / Aluminum
Fork shape	Twin wheel housing, closed
Swivel bearing	Stem, swiveling
Swivel radius	2.01 in
Swivel interference	4.02 in

WHEEL

Body material	Polypropylene, electric conductive
Tread material	Thermoplastic rubber, electric-conductive
Bearing	Plain bearing with spacer tube
Axle	Riveted
Threadguards	Without threadguard
Diameter	1.97 in
Tread width	0.39 in
Hardness of tread (A)	87 Shore A

FITTING

Fitting type	Blind hole for B10 fitting
Bolt hole diameter	0.31 in

© Copyright 2026 TENTE International GmbH

LUMINA

6A20YGI050L51-8

EAN 4031582311334

Order number 00078776

Product Drawings

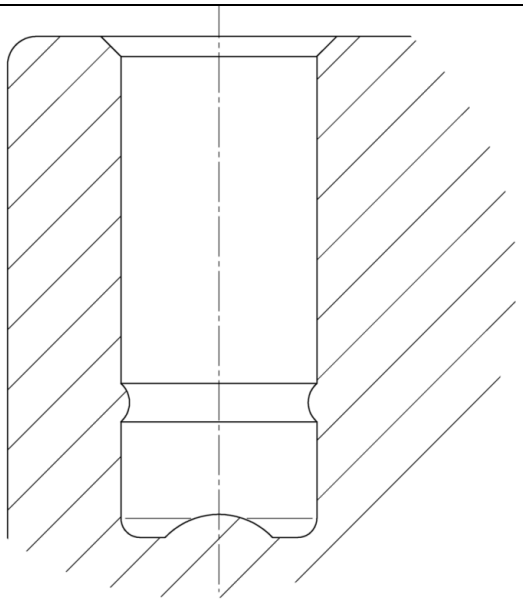

© Copyright 2026 TENTE International GmbH