PRODUCT INFORMATION

INTEGRAL

2044UAX125R26 RAL 9002

EAN 4031582443196



Image may differ from the original product

PERFORMANCE

Roll Performance	●●●○○
Movement Noise	●●●○○
Attrition	●●●●○
Corrosion Resistance	●●●○○

CORE ATTRIBUTES

Product Name	Integral
Type	Swivel castor with central, total or directional lock
Standard	similar EN12531- Hospital Bed Castors
Electric Conductive	No
Stainless	No
Temperature range (Minimum)	-30 °C
Temperature range (Maximum)	80 °C
Certification	Tested and monitored by TÜV Süd

HOUSING

Housing Material	Steel sheet, medium
Fork shape	Closed
Swivel Bearing	Precision ball bearing
Housing Color	Grey white (RAL9002)

WHEEL

Body material	Polyamide
Tread Material Mix	Polyurethane, injected
Bearing	Precision ball bearing, sealed
Threadguards	Integrated threadguard
Diameter	125 mm
Hardness of tread (D)	59 Shore D

FITTING

Fitting type	Stem with cam hole for profile bars
Bolt diameter	28 mm
Bolt length	96 mm
Hint	Washable beds must be sealed in the fitting area by the hospital bed manufacturer.

IF Design Award

Red Dot Design Award

© Copyright 2026 TENTE International GmbH

INTEGRAL

2044UAX125R26 RAL 9002

EAN 4031582443196

BETTER MOBILITY. BETTER LIFE.

Product Drawings

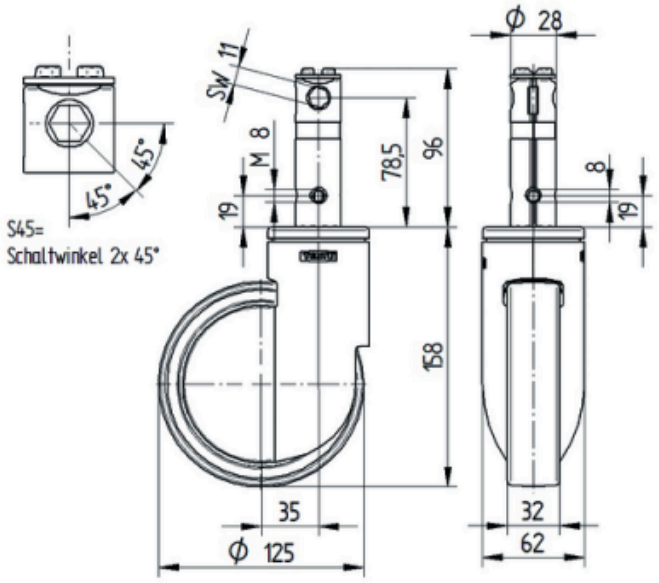

IF Design Award

Red Dot Design Award

© Copyright 2026 TENTE International GmbH