PRODUCT INFORMATION

# GALEA STAINLESS

5081PJC125P60-90x70

EAN 4031582368031



Image may differ from the original product

## PERFORMANCE

| | |
|---|---|
| Roll Performance | ●●●○○ |
| Movement noise | ●●●○○ |
| Attrition | ●●●○○ |
| Corrosion resistance | ●●●●● |

## CORE ATTRIBUTES

| | |
|---|---|
| Product name | Galea stainless |
| Type | Swivel caster with directional lock |
| Standard | EN12530 - Devices Castors |
| Load capacity at 1.8 mph | 220.46 lb |
| Electric conductive | no |
| Stainless | Yes |
| Load capacity Static | 440.92 lb |
| Temperature range (Minimum) | -4 °F |
| Temperature range (Maximum) | 140 °F |
| Overall height | 6.42 in |
| Overall weight | 1.26 lb |

## HOUSING

| | |
|---|---|
| Housing Material | Polyamide |
| Fork shape | Closed |
| Swivel bearing | Two ball races, reinforced or stainless |
| Offset | 1.57 in |
| Swivel interference | 8.07 in |

## WHEEL

| | |
|---|---|
| Body material | Polypropylene |
| Tread material | Thermoplastic rubber |
| Bearing | Precision ball bearing, stainless |
| Threadguards | With threadguard |
| Diameter | 4.92 in |
| Tread width | 1.18 in |
| Hardness of tread (A) | 87 Shore A |

## FITTING

| | |
|---|---|
| Fitting type | Rectangular plate |
| Plate length | 3.54 in |
| Plate width | 2.76 in |
| Plate hole length (Minimum) | 2.36 in |
| Plate hole length (Maximum) | 2.76 in |
| Plate hole width (Minimum) | 1.97 in |
| Plate hole width (Maximum) | 2.17 in |
| Plate hole diameter | 0.31 in |

© Copyright 2026 TENTE International GmbH

# GALEA STAINLESS

5081PJC125P60-90x70

EAN 4031582368031

BETTER MOBILITY. BETTER LIFE.

## Product Drawings

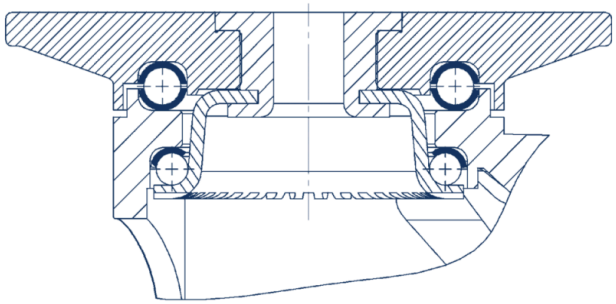

© Copyright 2026 TENTE International GmbH