PRODUCT INFORMATION

ALPHA STAINLESS

8477PJD125P62 TFR

EAN 4031582386752

BETTER MOBILITY. BETTER LIFE.

Image may differ from the original product

PERFORMANCE

Roll performance	●●●○○
Movement noise	●●●○○
Attrition	●●●○○
Corrosion resistance	●●●●●

CORE ATTRIBUTES

Product name	Alpha stainless
Type	Swivel castor with total lock
Standard	EN12532 - Transport Equipment
Load capacity at 2.5 mph	220.46 lb
Stainless	✓
Load capacity Static	440.92 lb
Temperature range (Minimum)	-4 °F
Temperature range (Maximum)	140 °F
Overall height	6.1 in
Overall weight	2.01 lb

WHEEL

Body material	Polypropylene
Tread material	Thermoplastic rubber
Bearing	Roller bearing, stainless
Axle	Screwed with nut
Diameter	4.92 in
Tread width	1.26 in
Hardness of tread (A)	87 Shore A

HOUSING

Material	Stainless steel, heavy
Fork shape	Broad
Swivel bearing	Two ball races
Offset	1.57 in
Swivel radius	4.76 in
Swivel interference	9.53 in

FITTING

Fitting type	Rectangular plate
Plate length	4.13 in
Plate width	3.35 in
Plate hole length (Minimum)	3.03 in
Plate hole length (Maximum)	3.15 in
Plate hole width (Maximum)	2.36 in
Plate hole diameter	0.35 in

© Copyright 2026 TENTE International GmbH

ALPHA STAINLESS

8477PJD125P62 TFR

EAN 4031582386752

BETTER MOBILITY. BETTER LIFE.
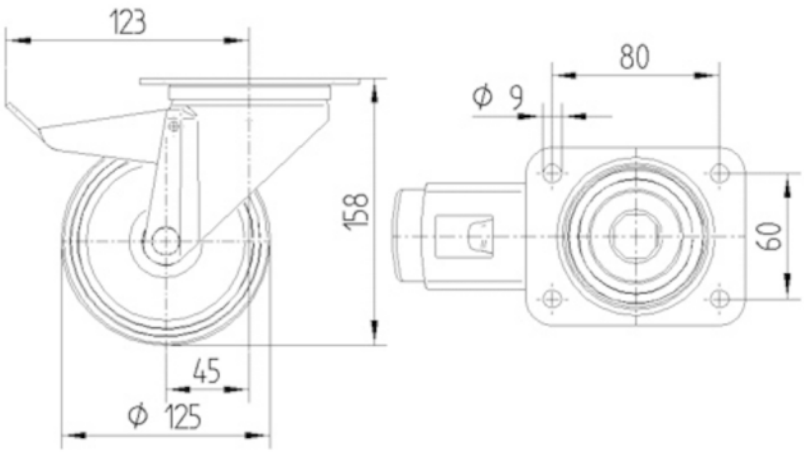
TECHNICAL DRAWINGS