PRODUCT INFORMATION

# KAPPA LOAD

## 9652ITP250P63 flat kick pedal

EAN 4031582445305



Image may differ from the original product

### PERFORMANCE

| | |
|---|---|
| Roll Performance | ●●●○○ |
| Movement Noise | ●●●○○ |
| Attrition | ●●●●○ |
| Corrosion Resistance | ●●●○○ |

### CORE ATTRIBUTES

| | |
|---|---|
| Product Name | Kappa load |
| Type | Swivel castor with total lock, head end of castor |
| Standard | EN12533 - Heavy Duty Castors |
| Load capacity at 4 km/h | 1000 kg |
| Electric Conductive | No |
| Stainless | No |
| Load capacity Static | 2000 kg |
| Temperature range (Minimum) | -20 °C |
| Temperature range (Maximum) | 60 °C |
| Overall Height | 305 mm |

### HOUSING

| | |
|---|---|
| Housing Material | Iron forged, heavy |
| Fork shape | Broad, reinforced |
| Swivel Bearing | Deep-groove ball thrust roller bearing |
| Offset | 61 mm |
| Swivel radius | 187 mm |
| Swivel interference | 374 mm |
| Lubrication nipple | 1 |

### WHEEL

| | |
|---|---|
| Tread profile | flat |
| Body material | Aluminium |
| Tread Material Mix | PUR casted premium |
| Bearing | Precision ball bearing |
| Axle | Screwed with nut |
| Threadguards | Without threadguard |
| Diameter | 250 mm |
| Tread width | 55 mm |
| Hardness of tread (A) | 92 Shore A |

### FITTING

| | |
|---|---|
| Fitting type | Medium rectangular plate |
| Plate length | 135 mm |
| Plate width | 110 mm |
| Plate hole length (Maximum) | 105 mm |
| Plate hole width (Minimum) | 75 mm |
| Plate hole width (Maximum) | 80 mm |
| Plate hole diameter | 11 mm |

© Copyright 2026 TENTE International GmbH

# KAPPA LOAD

## 9652ITP250P63 flat kick pedal

EAN 4031582445305

### Product Drawings

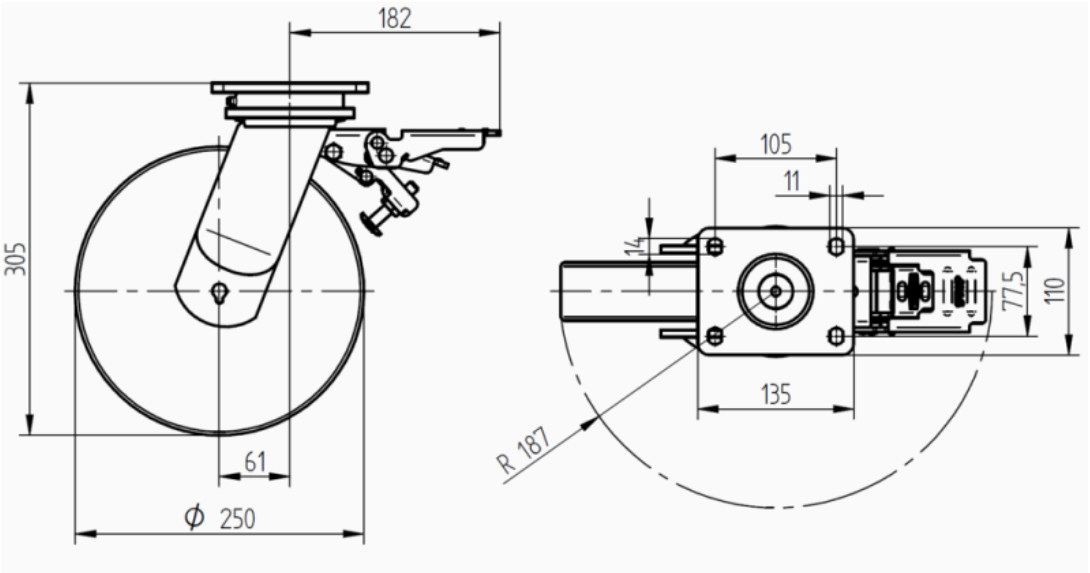


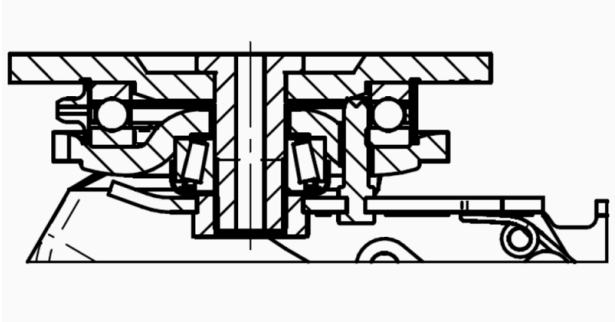

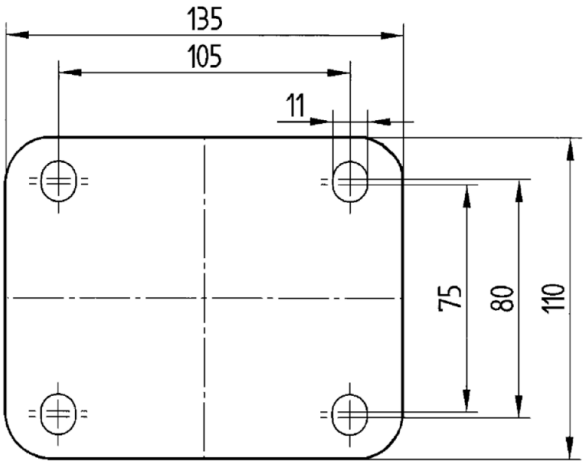


© Copyright 2026 TENTE International GmbH