PRODUCT INFORMATION

GALEA

5075PJP125P30-10

EAN 4031582379402

BETTER MOBILITY. BETTER LIFE.



Image may differ from the original product

PERFORMANCE

Roll Performance	●●●●○
Movement noise	●●●●○
Attrition	●●●●○
Corrosion resistance	●●●○○

CORE ATTRIBUTES

Product name	Galea
Type	Swivel caster with wheel brake
Standard	EN12530 - Devices Castors
Load capacity at 1.8 mph	220.46 lb
Electric conductive	no
Stainless	no
Load capacity Static	440.92 lb
Temperature range (Minimum)	-4 °F
Temperature range (Maximum)	140 °F
Overall height	6.38 in
Overall width	2.6 in
Overall weight	1.24 lb

HOUSING

Housing Material	Polyamide
Fork shape	Closed
Swivel bearing	Two ball races
Offset	1.57 in
Swivel radius	5.08 in
Swivel interference	10.16 in
Dome diameter	2.32 in

WHEEL

Body material	Polypropylene
Tread material	Thermoplastic rubber
Bearing	Precision ball bearing
Threadguards	With threadguard
Diameter	4.92 in
Tread width	1.18 in
Hardness of tread (A)	87 Shore A

FITTING

Fitting type	Bolt hole
Bolt hole diameter	0.39 in

© Copyright 2026 TENTE International GmbH

GALEA

5075PJP125P30-10

EAN 4031582379402

BETTER MOBILITY. BETTER LIFE.

Product Drawings

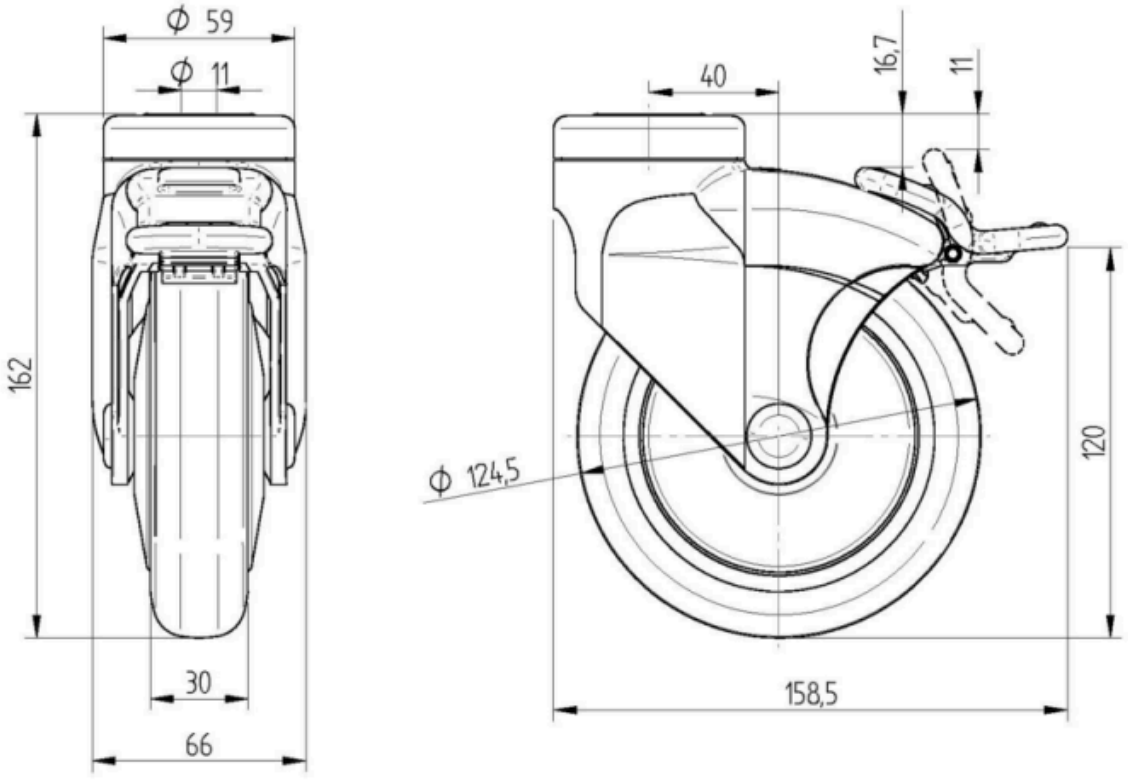

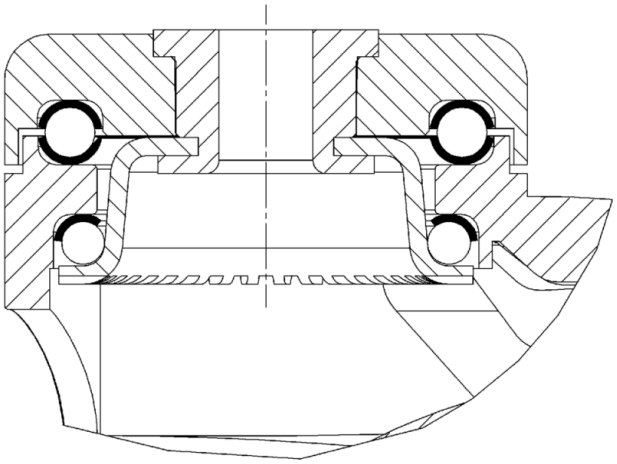

© Copyright 2026 TENTE International GmbH