PRODUCT INFORMATION

# NOVATECH

## FTP200x80-Ø25 HL92

EAN 4031582419061



Image may differ from the original product

### PERFORMANCE

| | |
|---|---|
| Roll Performance | ●●●●○ |
| Movement Noise | ●●●○○ |
| Attrition | ●●●●○ |
| Corrosion Resistance | ●●●○○ |

### CORE ATTRIBUTES

| | |
|---|---|
| Product Name | Novatech |
| Type | Wheel |
| Standard | EN12533 - Heavy Duty Castors |
| Load capacity at 4 km/h | 1680 kg |
| Load capacity at 6 km/h | 1400 kg |
| Electric Conductive | No |
| Stainless | No |
| Load capacity Static | 3360 kg |
| Temperature range (Minimum) | -20 °C |
| Temperature range (Maximum) | 60 °C |
| Overall weight | 7.06 kg |

### WHEEL

| | |
|---|---|
| Body material | Cast iron |
| Tread Material Mix | PUR casted premium |
| Bearing | Precision ball bearing |
| Threadguards | With threadguard |
| Diameter | 200 mm |
| Tread width | 80 mm |
| Axle Hole Diameter | 25 mm |
| Hub Length | 92 mm |
| Hardness of tread (A) | 92 Shore A |

© Copyright 2026 TENTE International GmbH

# NOVATECH

## FTP200x80-Ø25 HL92

EAN 4031582419061

BETTER MOBILITY. BETTER LIFE.

### Product Drawings

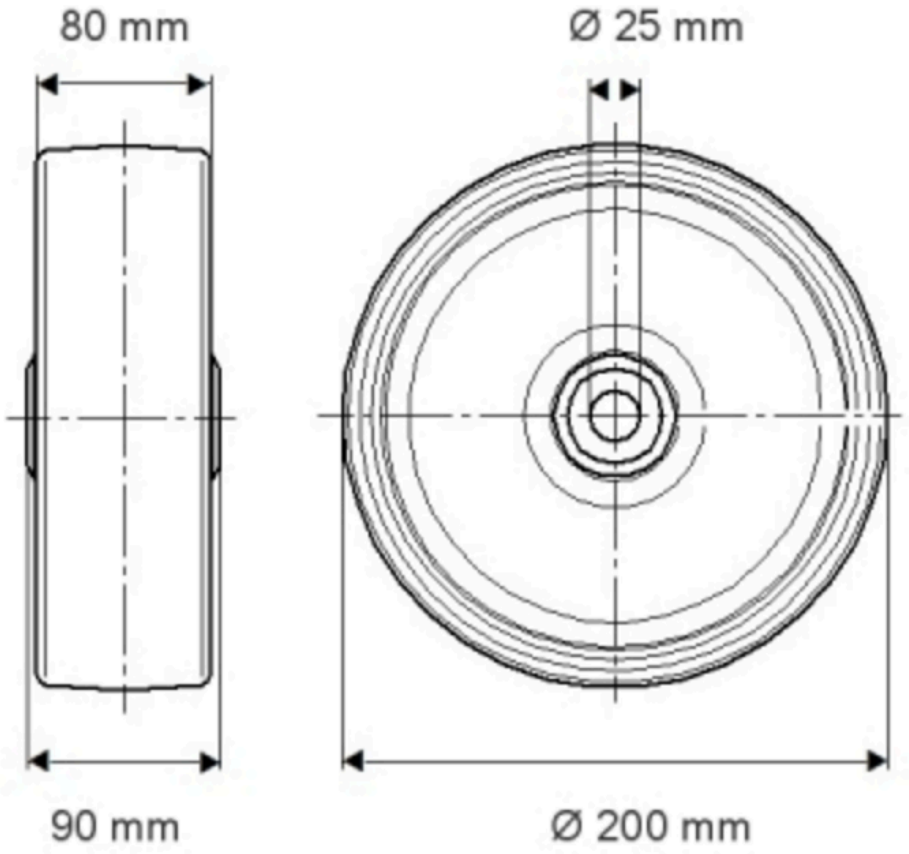


© Copyright 2026 TENTE International GmbH

# NOVATECH

## FTP200x80-Ø25 HL92

EAN 4031582419061

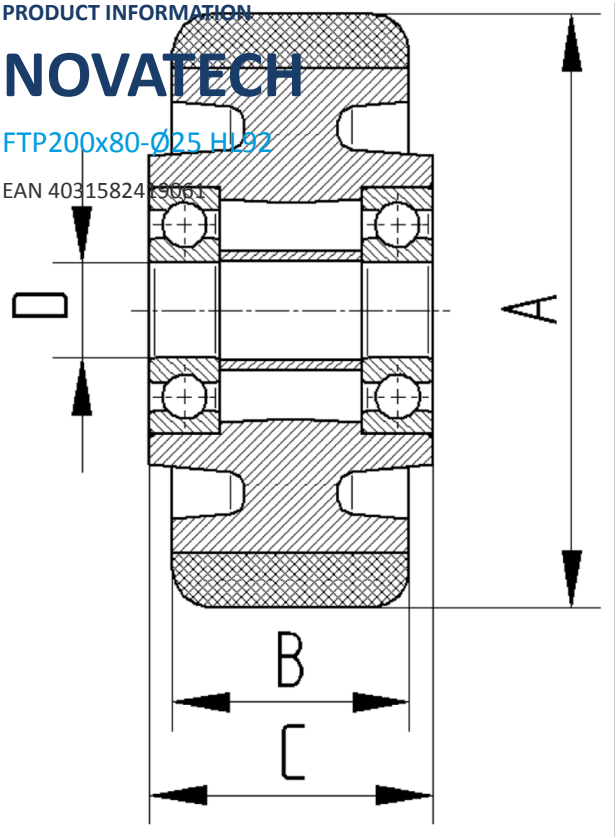


BETTER MOBILITY. BETTER LIFE.

© Copyright 2026 TENTE International GmbH