PRODUCT INFORMATION

# ZETA

4680IEP125P63

EAN 4031582307795
Order number 00804229

BETTER MOBILITY. BETTER LIFE.

Image may differ from the original product

## PERFORMANCE

| | |
|---|---|
| Roll performance | ●●●●○ |
| Movement noise | ●●●●● |
| Attrition | ●●●○○ |
| Corrosion resistance | ●●●○○ |

## CORE ATTRIBUTES

| | |
|---|---|
| Product name | Zeta |
| Type | Swivel castor |
| Standard | EN12532 - Transport Equipment |
| Load capacity at 4 km/h | 300 kg |
| Load capacity at 6 km/h | 240 kg |
| Load capacity Static | 600 kg |
| Temperature range (Minimum) | -20 °C |
| Temperature range (Maximum) | 85 °C |
| Overall height | 164 mm |
| Overall width | 96 mm |
| Overall weight | 2.868 kg |

## WHEEL

| | |
|---|---|
| Body material | Aluminium |
| Tread hardness | soft |
| Tread material | Elastic tire, black, vulcanized |
| Bearing | Precision ball bearing |
| Axle | Screwed with nut |
| Wheel color | Jet black (similar RAL9005) |
| Threadguards | Without threadguard |
| Diameter | 125 mm |
| Tread width | 50 mm |
| Body width | 50 mm |
| Hardness of tread (A) | 67 Shore A |

## HOUSING

| | |
|---|---|
| Material fork | Steel sheet, very heavy |
| Fork shape | Broad, reinforced |
| Swivel bearing | Two ball races, reinforced or stainless |
| Colour | Blue passivated |
| Offset | 55 mm |
| Swivel radius | 117.5 mm |
| Swivel interference | 235 mm |
| Dome diameter | 96 mm |

## FITTING

| | |
|---|---|
| Fitting type | Medium rectangular plate |
| Plate length | 137 mm |
| Plate width | 105 mm |
| Plate hole length (Minimum) | 75 mm |
| Plate hole length (Maximum) | 80 mm |
| Plate hole width (Minimum) | 75 mm |
| Plate hole width (Maximum) | 105 mm |
| Plate hole diameter | 11 mm |

© Copyright 2026 TENTE International GmbH

# ZETA

4680IEP125P63

EAN 4031582307795
Order number 00804229

BETTER MOBILITY. BETTER LIFE.
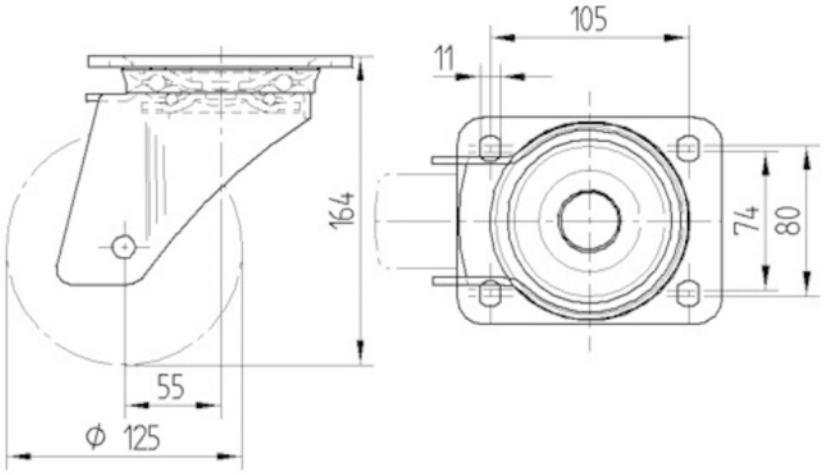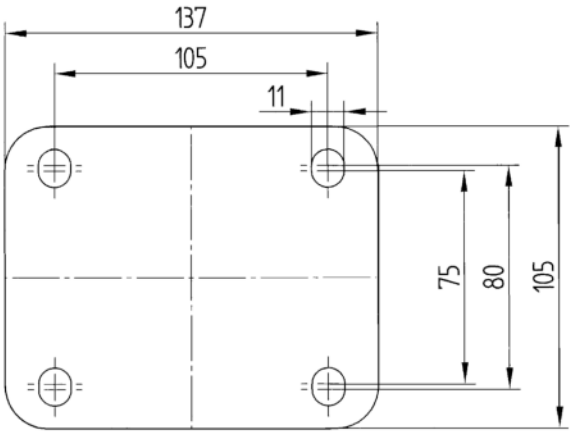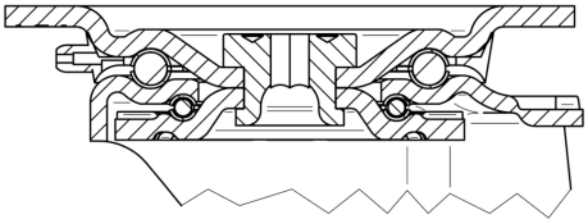
## TECHNICAL DRAWINGS