PRODUCT INFORMATION

AGILA

2477UOO075P30-11 TFR

EAN 4031582390124

BETTER MOBILITY. BETTER LIFE.



Image may differ from the original product

PERFORMANCE

Roll Performance	●●●○○
Movement Noise	●●●○○
Attrition	●●●●●
Corrosion Resistance	●●●○○

CORE ATTRIBUTES

Product Name	Agila
Type	Swivel castor with total lock
Standard	EN12530 - Devices Castors
Load capacity at 3 km/h	75 kg
Electric Conductive	No
Stainless	No
Load capacity Static	150 kg
Temperature range (Minimum)	-40 °C
Temperature range (Maximum)	80 °C
Overall Height	100 mm
Overall weight	0.26 kg

HOUSING

Housing Material	Steel sheet, medium
Fork shape	Broad
Swivel Bearing	Two ball races
Housing Color	Blue passivated
Offset	24 mm
Swivel radius	80 mm
Swivel interference	160 mm

WHEEL

Body material	Polyamide
Tread Material Mix	Identical with wheel body
Bearing	Plain bearing
Threadguards	Without threadguard
Diameter	75 mm
Tread width	22 mm
Hardness of tread (D)	75 Shore D

FITTING

Fitting type	Bolt hole
Bolt hole diameter	11 mm
Hint	Castors can be mounted with standard screws of any length.

© Copyright 2026 TENTE International GmbH

AGILA

2477UOO075P30-11 TFR

EAN 4031582390124

BETTER MOBILITY. BETTER LIFE.

Product Drawings

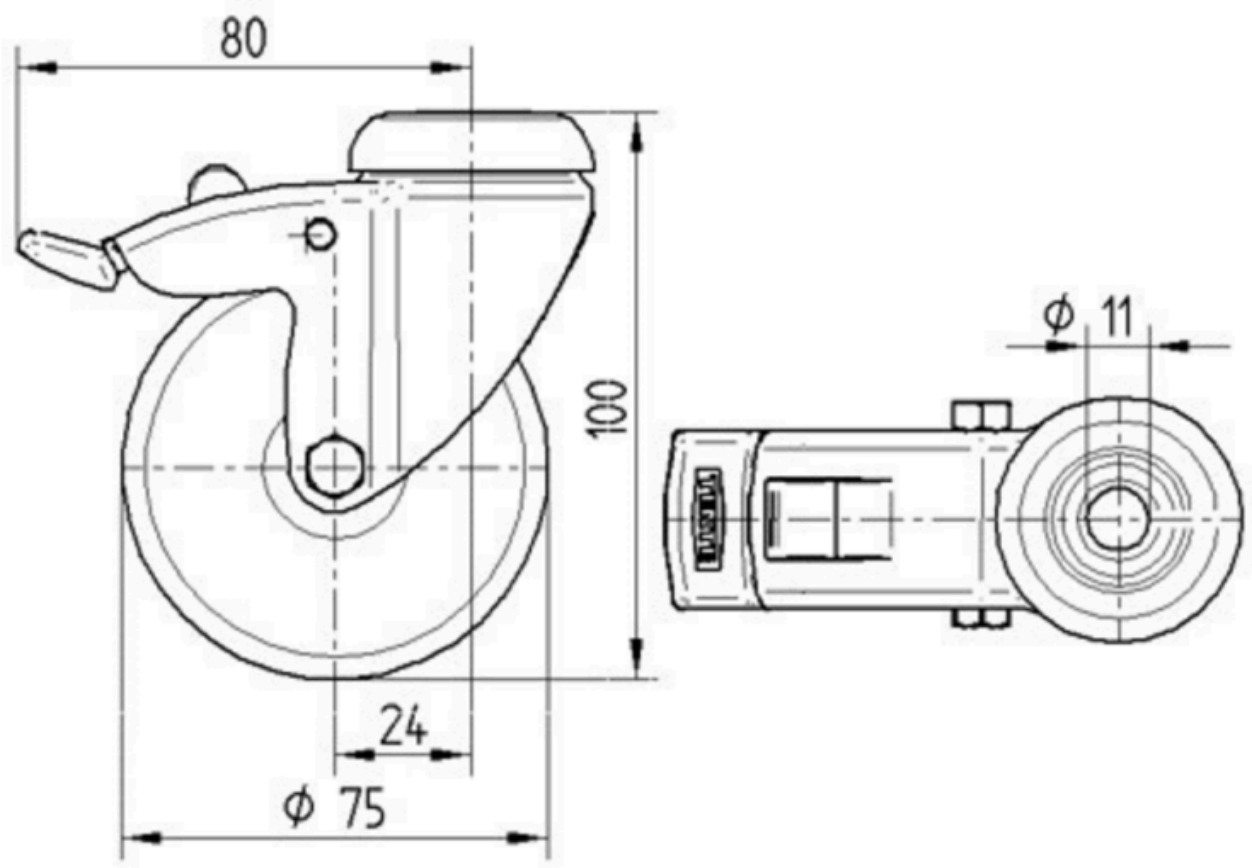

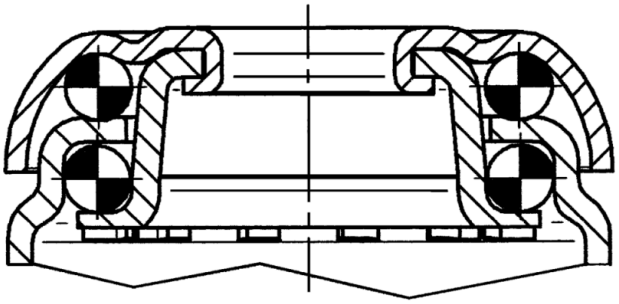

© Copyright 2026 TENTE International GmbH