PRODUCT INFORMATION

ELASTECH

IEP 300x55-Ø20 HL66

EAN 4031582319781

BETTER MOBILITY. BETTER LIFE.



Image may differ from the original product

WHEEL

Tread hardness	soft
Body material	Aluminium
Tread Material Mix	Elastic tire, black, vulcanized
Bearing	Precision ball bearing
Wheel Color	Jet black (similar RAL9005)
Threadguards	Without threadguard
Diameter	300 mm
Tread width	55 mm
Axle Hole Diameter	20 mm
Hub Length	66 mm
Body width	55 mm
Hardness of tread (A)	68 Shore A

PERFORMANCE

Roll Performance	●●○○○
Movement Noise	●●●●●
Attrition	●●●○○
Corrosion Resistance	●●●○○

CORE ATTRIBUTES

Product Name	Elastech
Type	Wheel
Standard	EN12532 - Transport Equipment
Load capacity at 4 km/h	600 kg
Load capacity at 6 km/h	480 kg
Electric Conductive	No
Stainless	No
Load capacity Static	1200 kg
Temperature range (Minimum)	-20 °C
Temperature range (Maximum)	85 °C
Overall weight	3.89 kg

© Copyright 2026 TENTE International GmbH

ELASTECH

IEP 300x55-Ø20 HL66

EAN 4031582319781

Order number 00834703

Product Drawings

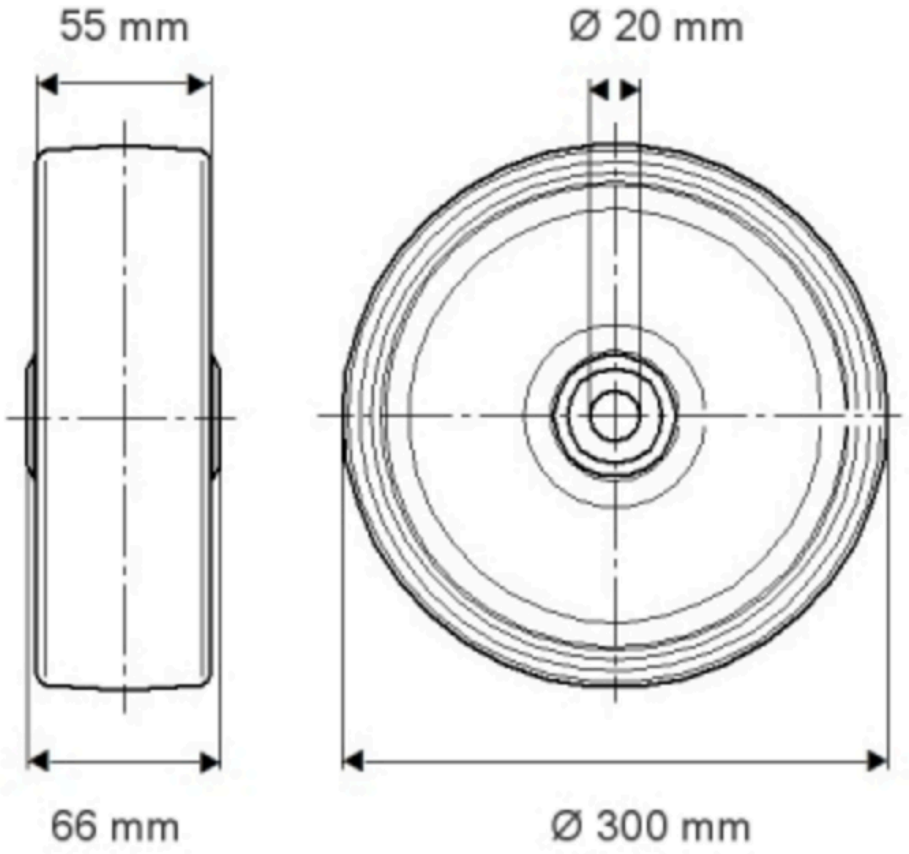

© Copyright 2026 TENTE International GmbH

ELASTECH

IEP 300x55-Ø20 HL66

EAN 4031582319781

Order number 00332793

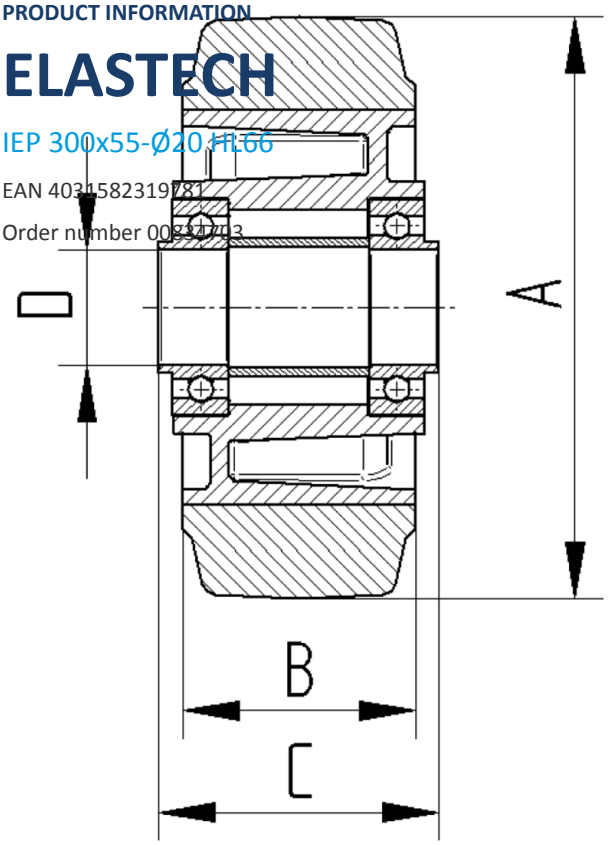

© Copyright 2026 TENTE International GmbH