PRODUCT INFORMATION

NOVATECH

ETY 080x20-Ø20 HL14

EAN 4031582318524



Image may differ from the original product

WHEEL

Body material	Steel, iron
Tread Material Mix	PUR casted premium
Bearing	Precision ball bearing (RS/2RS)
Wheel Color	Honey yellow (RAL1005)
Diameter	80 mm
Tread width	20 mm
Axle Hole Diameter	20 mm
Hub Length	14 mm
Body width	20 mm
Hardness of tread (A)	92 Shore A
Hardness of tread (D)	42 Shore D

PERFORMANCE

Roll Performance	●●●●○
Movement Noise	●●●○○
Attrition	●●●●○
Corrosion Resistance	●●●○○

CORE ATTRIBUTES

Product Name	Novatech
Type	Wheel
Standard	EN12532 - Transport Equipment
Load capacity at 4 km/h	140 kg
Load capacity at 6 km/h	110 kg
Electric Conductive	No
Stainless	No
Load capacity Static	280 kg
Temperature range (Minimum)	-10 °C
Temperature range (Maximum)	60 °C
Overall weight	0.3 kg

© Copyright 2026 TENTE International GmbH

NOVATECH

ETY 080x20-Ø20 HL14

EAN 4031582318524

BETTER MOBILITY. BETTER LIFE.

Product Drawings

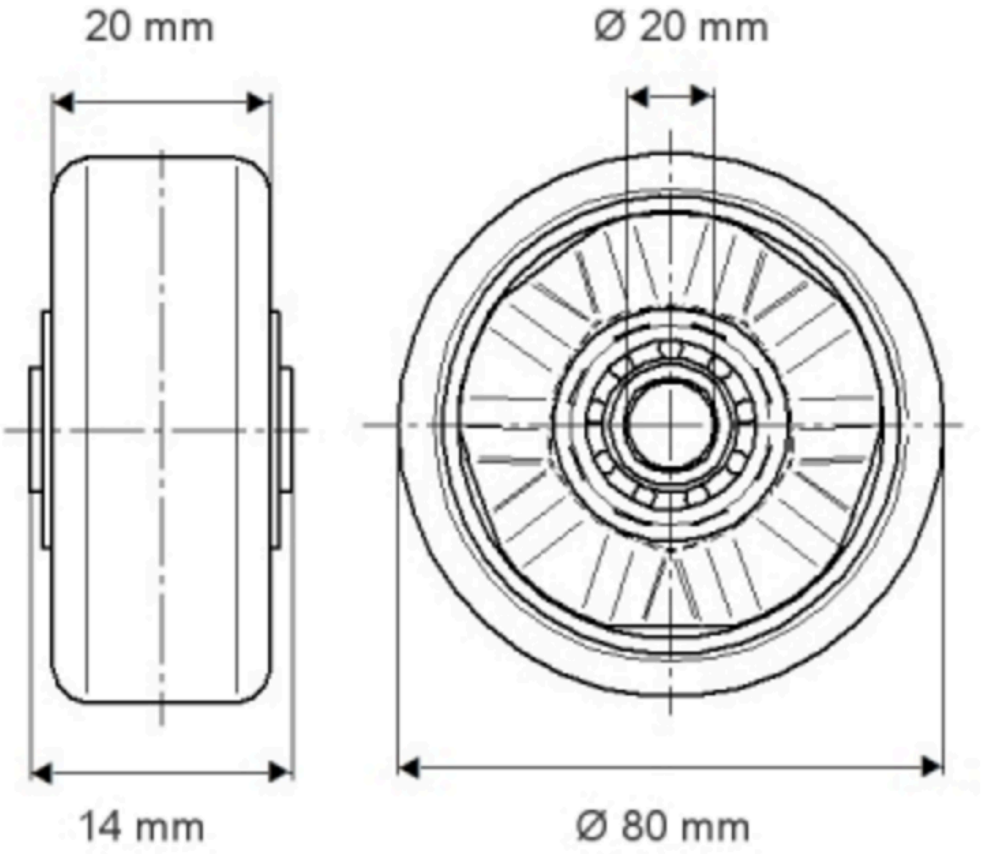

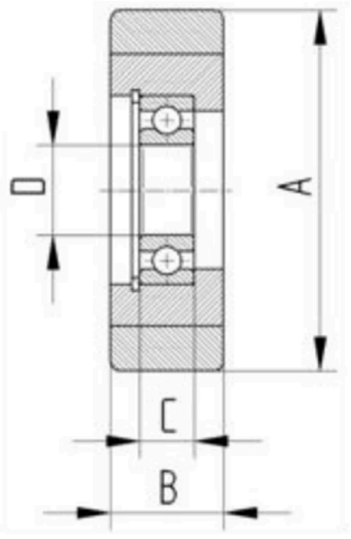

© Copyright 2026 TENTE International GmbH