PRODUCT INFORMATION

AGILA

2477DIK100P30-13 TFR

EAN 4031582394450



Image may differ from the original product

PERFORMANCE

Roll Performance	●●●○○
Movement Noise	●●●○○
Attrition	●●●○○
Corrosion Resistance	●●●○○

CORE ATTRIBUTES

Product Name	Agila
Type	Swivel castor with total lock
Standard	EN12530 - Devices Castors
Load capacity at 3 km/h	80 kg
Electric Conductive	No
Stainless	No
Load capacity Static	160 kg
Temperature range (Minimum)	-20 °C
Temperature range (Maximum)	85 °C
Overall Height	135 mm
Overall weight	1.02 kg

HOUSING

Housing Material	Steel sheet, medium
Fork shape	Broad
Swivel Bearing	Two ball races
Housing Color	Blue passivated
Offset	43.5 mm
Swivel radius	131 mm
Swivel interference	262 mm

WHEEL

Body material	Sheet Steel
Tread Material Mix	Solid rubber, non-marking
Bearing	Cone ball bearing
Threadguards	With threadguard
Diameter	100 mm
Tread width	32 mm
Hardness of tread (A)	80 Shore A

FITTING

Fitting type	Bolt hole
Bolt hole diameter	13 mm
Hint	Castors can be mounted with standard screws of any length.

© Copyright 2026 TENTE International GmbH

AGILA

2477DIK100P30-13 TFR

EAN 4031582394450

BETTER MOBILITY. BETTER LIFE.

Product Drawings

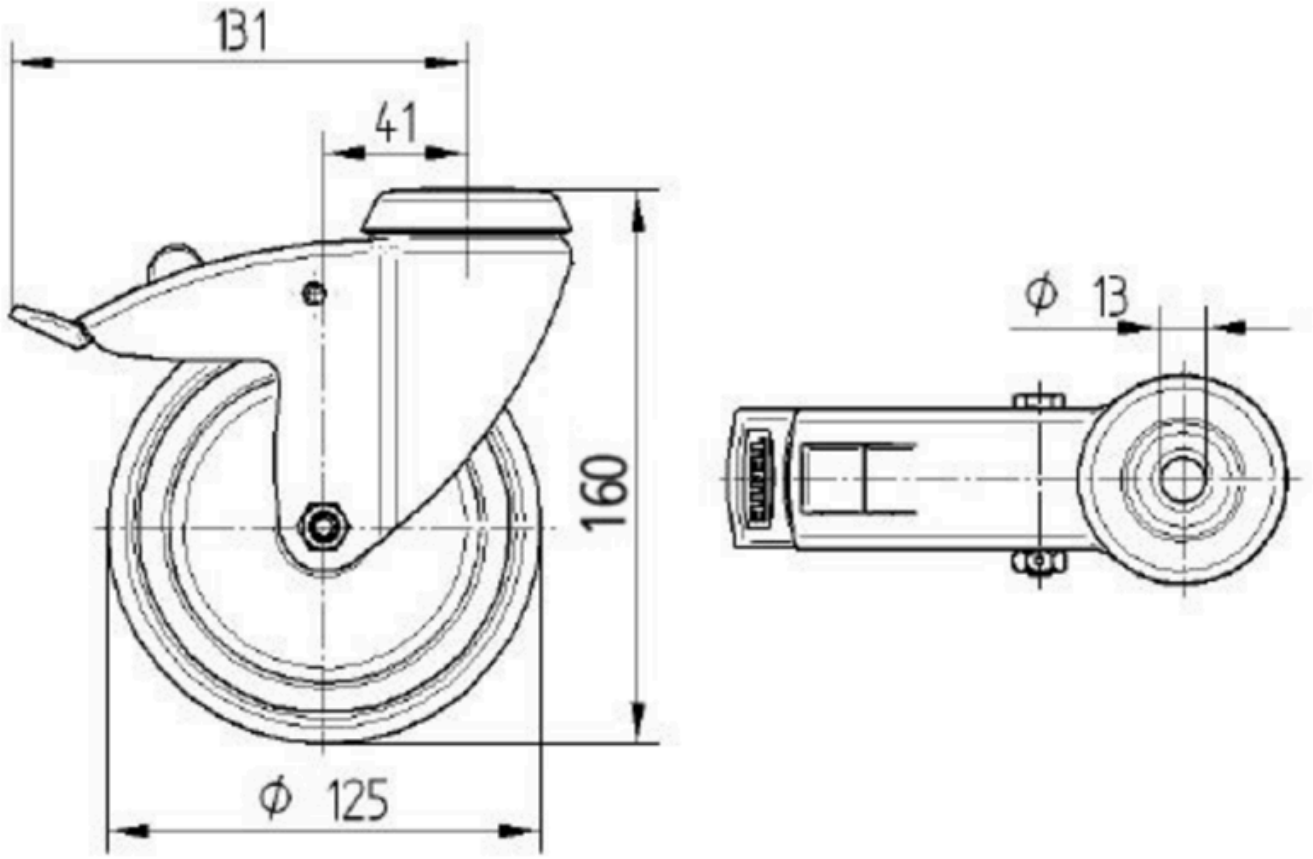

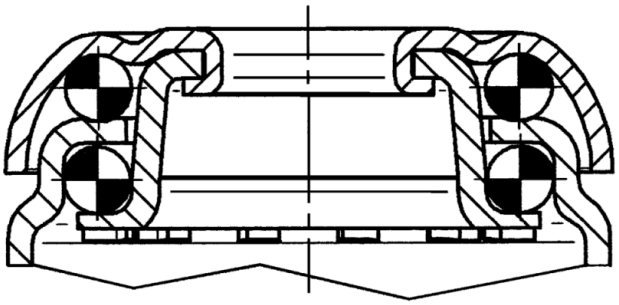

© Copyright 2026 TENTE International GmbH