PRODUCT INFORMATION

DURATECH

UOP200x50-Ø20

EAN 4031582323528



Image may differ from the original product

PERFORMANCE

Roll Performance	●●●●●
Movement Noise	●●●○○
Attrition	●●●●●
Corrosion Resistance	●●●○○

CORE ATTRIBUTES

Product Name	Duratech
Type	Wheel
Standard	EN12532 - Transport Equipment
Load capacity at 4 km/h	800 kg
Electric Conductive	No
Stainless	No
Load capacity Static	1600 kg
Temperature range (Minimum)	-25 °C
Temperature range (Maximum)	80 °C
Overall weight	1.01 kg

WHEEL

Body material	Polyamide
Tread Material Mix	Identical with wheel body
Bearing	Precision ball bearing
Threadguards	With threadguard
Diameter	200 mm
Tread width	50 mm
Axle Hole Diameter	20.1 mm
Hub Length	60 mm
Hardness of tread (D)	75 Shore D

© Copyright 2026 TENTE International GmbH

DURATECH

UOP200x50-Ø20

EAN 4031582323528

Order number 00002304

Product Drawings

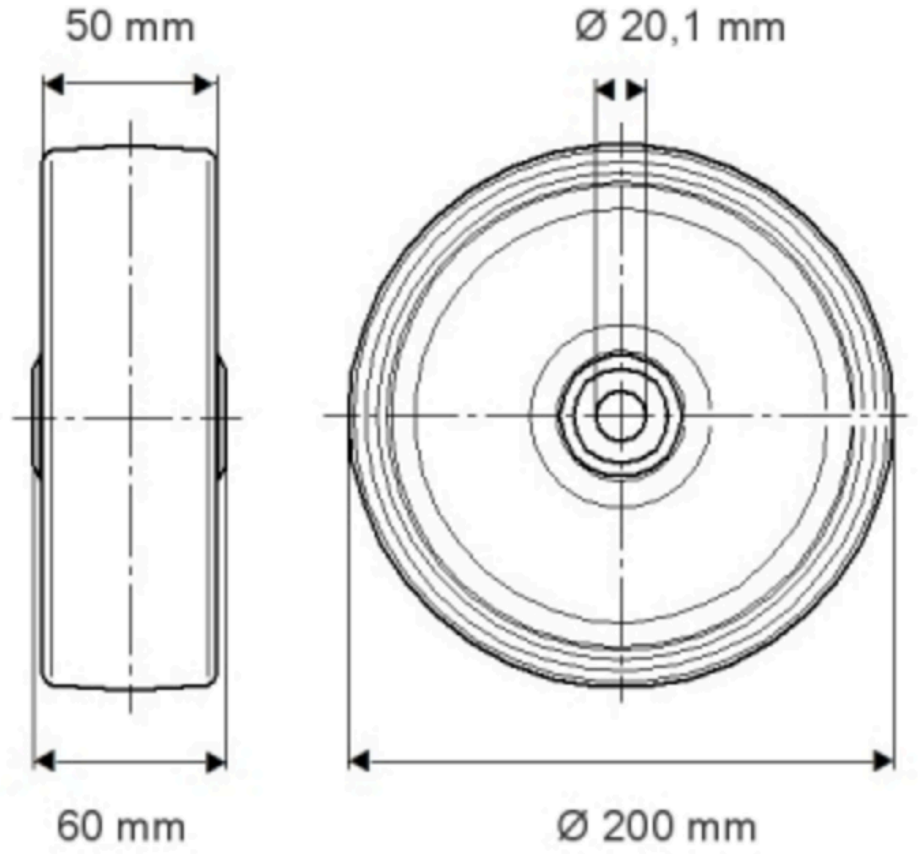

© Copyright 2026 TENTE International GmbH