PRODUCT INFORMATION

ALPHA STAINLESS

8477UFC160P63

EAN 4031582422566



Image may differ from the original product

PERFORMANCE

Roll Performance	●●●○○
Movement Noise	●●●●●
Attrition	●●●○○
Corrosion Resistance	●●●●●

CORE ATTRIBUTES

Product Name	Alpha stainless
Type	Swivel castor with total lock
Standard	EN12532 - Transport Equipment
Load capacity at 4 km/h	300 kg
Electric Conductive	No
Stainless	Yes
Load capacity Static	600 kg
Temperature range (Minimum)	-20 °C
Temperature range (Maximum)	80 °C
Overall Height	200 mm
Overall weight	2.56 kg

HOUSING

Housing Material	Stainless steel, heavy
Fork shape	Broad
Swivel Bearing	Two ball races
Housing Color	Stainless steel
Offset	60 mm
Swivel interference	334 mm

WHEEL

Tread hardness	soft
Body material	Polyamide
Tread Material Mix	Elastic tire, non-marking, vulcanized
Bearing	Precision ball bearing, stainless
Axle	Screwed with nut
Threadguards	With threadguard
Diameter	160 mm
Tread width	46 mm
Hardness of tread (A)	64 Shore A

FITTING

Fitting type	Medium rectangular plate
Plate length	137 mm
Plate width	105 mm
Plate hole length (Maximum)	105 mm
Plate hole width (Minimum)	75 mm
Plate hole width (Maximum)	80 mm
Plate hole diameter	11 mm

© Copyright 2026 TENTE International GmbH

ALPHA STAINLESS

8477UFC160P63

EAN 4031582422566

BETTER MOBILITY. BETTER LIFE.

Product Drawings

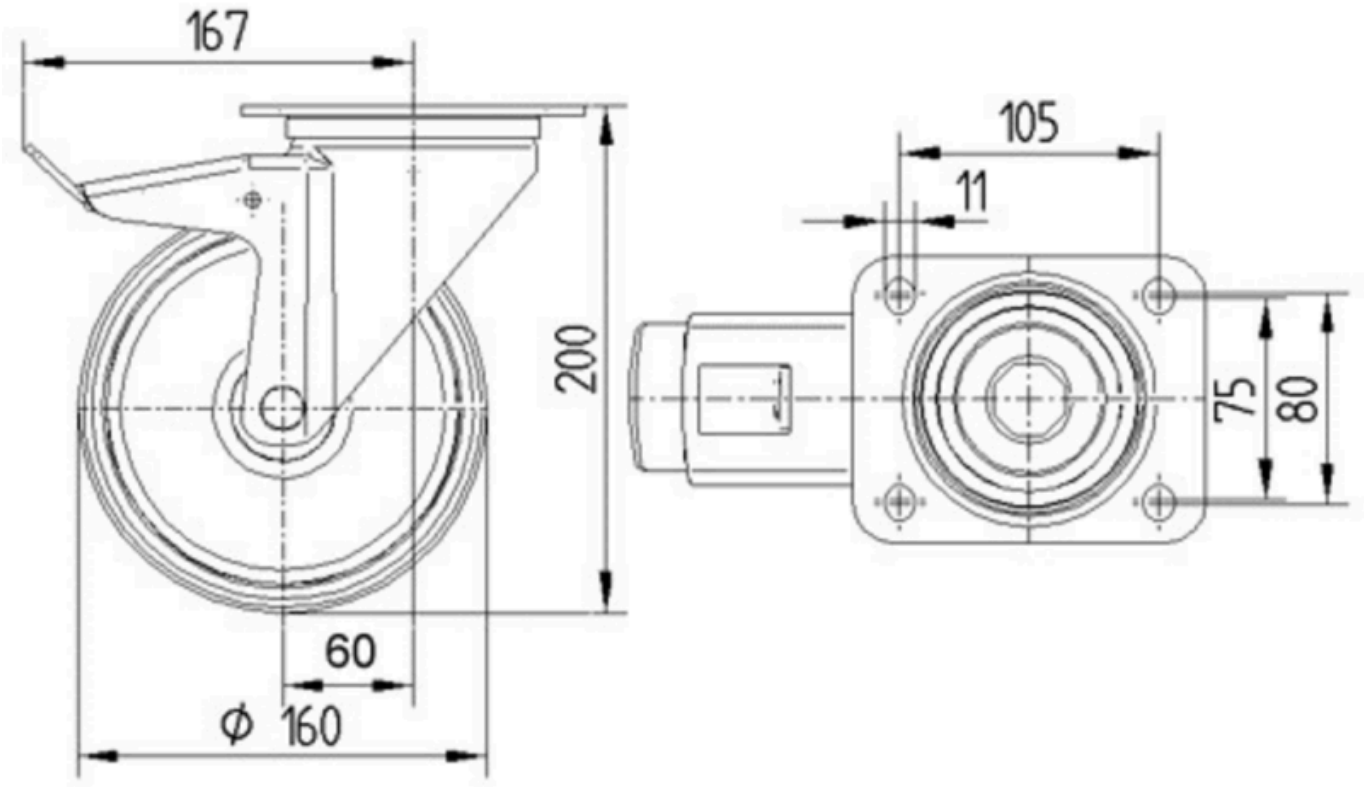

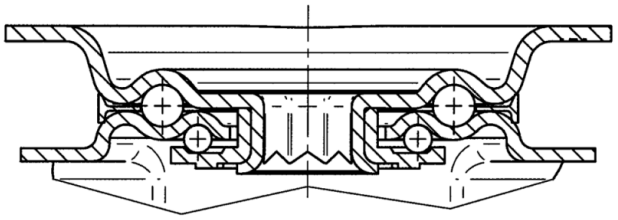

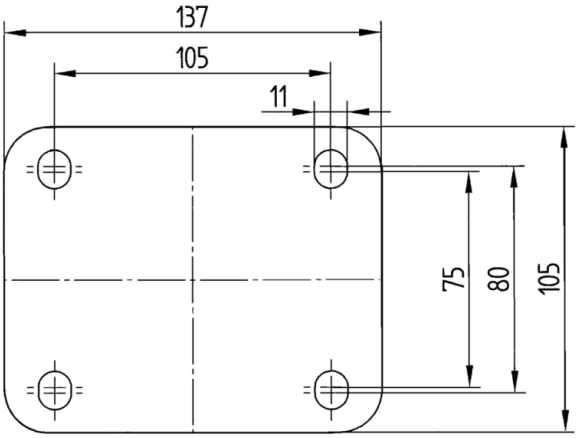

© Copyright 2026 TENTE International GmbH