PRODUCT INFORMATION

ALPHA STAINLESS

8470IDG100P30-13 TDK

EAN 4031582382396



Image may differ from the original product

PERFORMANCE

Roll Performance	●●●○○
Movement noise	●●●○○
Attrition	●●●○○
Corrosion resistance	●●●●●

CORE ATTRIBUTES

Product name	Alpha stainless
Type	Swivel caster
Standard	EN12532 - Transport Equipment
Load capacity at 2.5 mph	176.37 lb
Electric conductive	no
Stainless	Yes
Load capacity Static	352.74 lb
Temperature range (Minimum)	-22 °F
Temperature range (Maximum)	482 °F
Overall height	5.04 in
Overall weight	1.93 lb

HOUSING

Housing Material	Stainless steel, heavy
Fork shape	Broad
Swivel bearing	Two ball races
Housing Color	Stainless steel
Offset	1.61 in
Swivel radius	3.58 in
Swivel interference	7.17 in

WHEEL

Tread hardness	soft
Body material	Aluminum
Tread material	Damping, heat resistant
Bearing	Dry bearing bush
Axle	Screwed with nut
Threadguards	Without threadguard
Diameter	3.94 in
Tread width	1.38 in
Hardness of tread (A)	75 Shore A

FITTING

Fitting type	Bolt hole
Bolt hole diameter	0.51 in

© Copyright 2026 TENTE International GmbH

ALPHA STAINLESS

8470IDG100P30-13 TDK

EAN 4031582382396

BETTER MOBILITY. BETTER LIFE.

Product Drawings

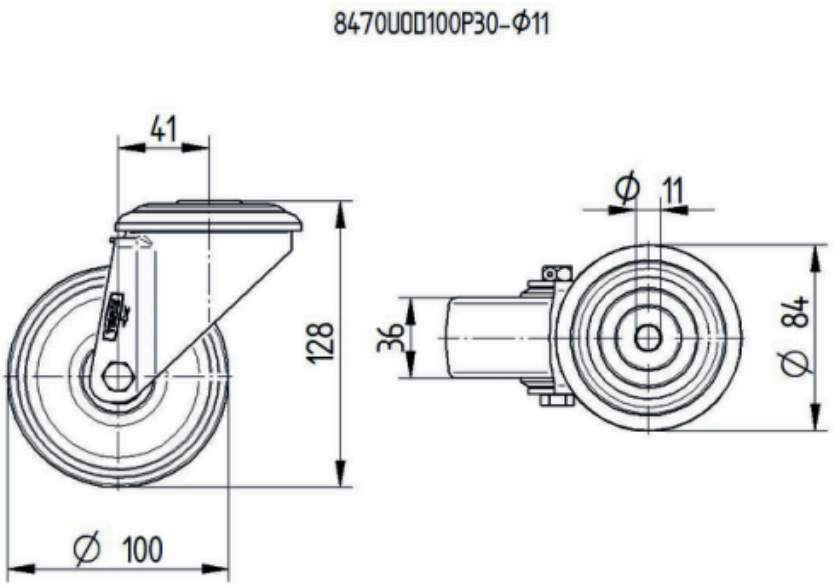

© Copyright 2026 TENTE International GmbH