PRODUCT INFORMATION

NOVATECH

FTX140x50-Ø20 HL55-A

EAN 4031582339963



Image may differ from the original product

WHEEL

Body material	Cast iron
Tread Material Mix	PUR casted premium
Bearing	Precision ball bearing, sealed
Threadguards	With threadguard
Diameter	140 mm
Tread width	50 mm
Axle Hole Diameter	20 mm
Hub Length	55 mm
Hardness of tread (A)	92 Shore A
Bearing type	6006 2RS
Sealing type	A
Suitable for	bt_linde

PERFORMANCE

Roll Performance	●●●○○
Movement Noise	●●●○○
Attrition	●●●●○
Corrosion Resistance	●●●○○

CORE ATTRIBUTES

Product Name	Novatech
Type	Wheel
Load capacity at 3 km/h	630 kg
Electric Conductive	No
Stainless	No
Load capacity Static	1260 kg
Temperature range (Minimum)	-20 °C
Temperature range (Maximum)	60 °C
Overall weight	2.47 kg

© Copyright 2026 TENTE International GmbH

NOVATECH

FTX140x50-Ø20 HL55-A

EAN 4031582339963

BETTER MOBILITY. BETTER LIFE.

Product Drawings

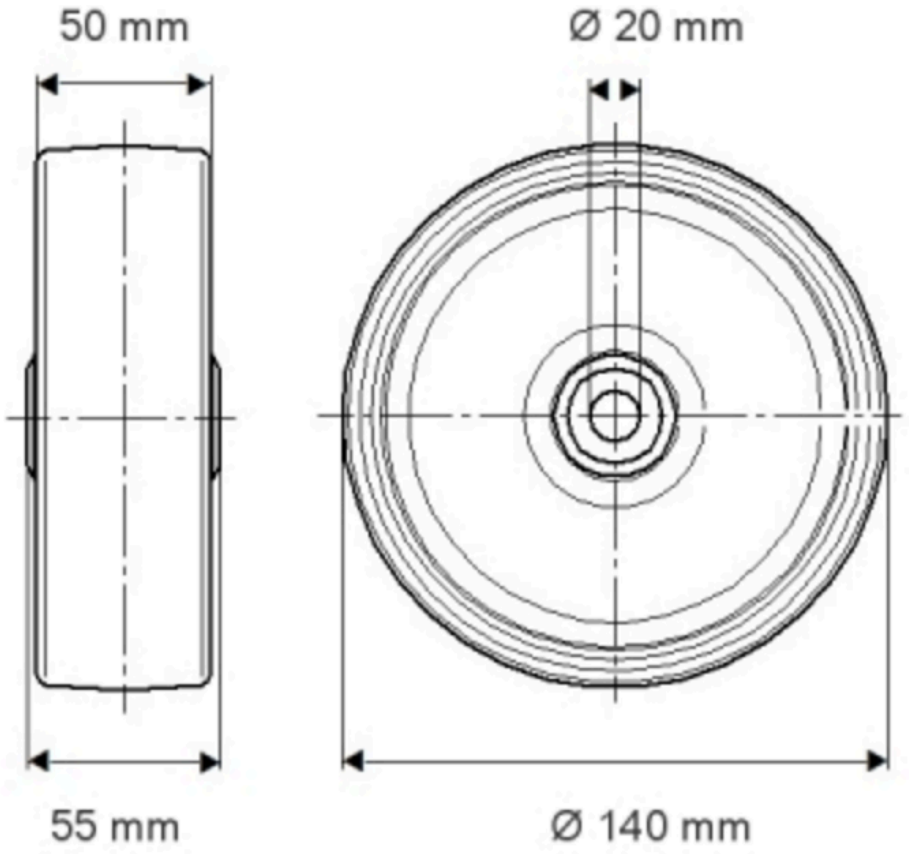

© Copyright 2026 TENTE International GmbH