PRODUCT INFORMATION

ZETA

4681TOP160P63

EAN 4031582308044



Image may differ from the original product

PERFORMANCE

Roll Performance	●●●○○
Movement Noise	●●●○○
Attrition	●●●●○
Corrosion Resistance	●●●○○

CORE ATTRIBUTES

Product Name	Zeta
Type	Swivel castor with directional lock
Standard	EN12532 - Transport Equipment
Load capacity at 4 km/h	800 kg
Load capacity at 6 km/h	640 kg
Electric Conductive	No
Stainless	No
Load capacity Static	1600 kg
Temperature range (Minimum)	-30 °C
Temperature range (Maximum)	80 °C
Overall Height	200 mm
Overall width	96 mm
Overall weight	3.28 kg

HOUSING

Housing Material	Steel sheet, very heavy
Fork shape	Broad, reinforced
Swivel Bearing	Two ball races, reinforced or stainless
Housing Color	Blue passivated
Offset	55 mm
Swivel interference	230 mm
Dome diameter	96 mm

WHEEL

Body material	Polyamide, heavy
Tread Material Mix	Identical with wheel body
Bearing	Precision ball bearing
Axle	Screwed with nut
Wheel Color	Natural white
Threadguards	Without threadguard
Diameter	160 mm
Tread width	50 mm
Body width	50 mm
Hardness of tread (D)	75 Shore D

FITTING

Fitting type	Medium rectangular plate
Plate length	137 mm
Plate width	105 mm
Plate hole length (Minimum)	75 mm
Plate hole length (Maximum)	80 mm
Plate hole width (Minimum)	75 mm
Plate hole width (Maximum)	105 mm
Plate hole diameter	11 mm

© Copyright 2026 TENTE International GmbH

ZETA

4681TOP160P63

EAN 4031582308044

Order number 00830076

Product Drawings

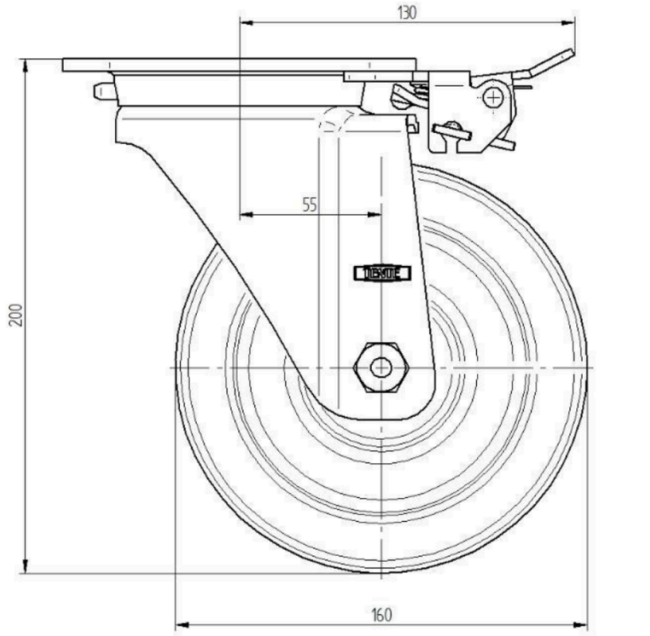

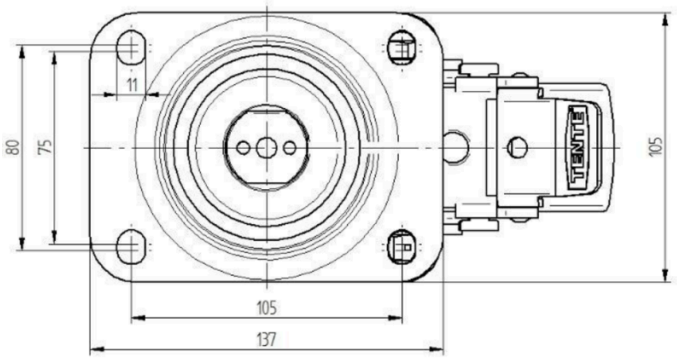

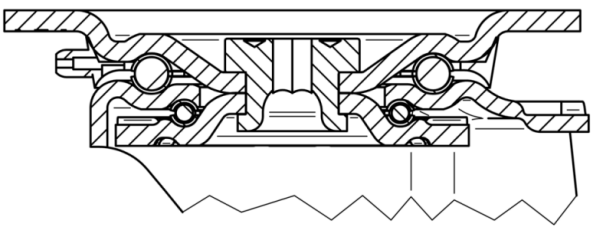

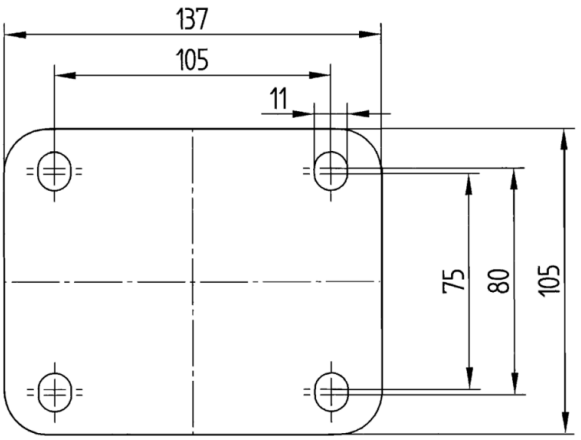

© Copyright 2026 TENTE International GmbH