PRODUCT INFORMATION

LINEA LOAD

5945UAP050L51-8 load 9002

EAN 4031582421576

BETTER MOBILITY. BETTER LIFE.



Image may differ from the original product

PERFORMANCE

Roll Performance	●●●●●
Movement Noise	●●●●○
Attrition	●●●●●
Corrosion Resistance	●●●●○

CORE ATTRIBUTES

Product Name	Linea load
Type	Swivel castor with wheel brake
Standard	EN12530 - Devices Castors
Load capacity at 3 km/h	100 kg
Electric Conductive	No
Stainless	No
Load capacity Static	200 kg
Temperature range (Minimum)	-10 °C
Temperature range (Maximum)	40 °C
Overall Height	50 mm
Overall width	47.5 mm
Overall weight	0.09 kg

HOUSING

Housing Material	Polyamide
Fork shape	Twin wheel housing
Swivel Bearing	Precision ball bearing
Swivel radius	51 mm
Swivel interference	102 mm
Dome diameter	23 mm

WHEEL

Body material	Polyamide
Tread Material Mix	Polyurethane, injected
Bearing	Precision ball bearing
Threadguards	With threadguard
Diameter	50 mm
Tread width	13 mm
Hardness of tread (A)	92 Shore A

FITTING

Fitting type	Blind hole for B10
Bolt hole diameter	8 mm

Deutscher Designer Club

Interzum Award

IF Design Award

© Copyright 2026 TENTE International GmbH

LINEA LOAD

5945UAP050L51-8 load 9002

EAN 4031582421576

Product Drawings

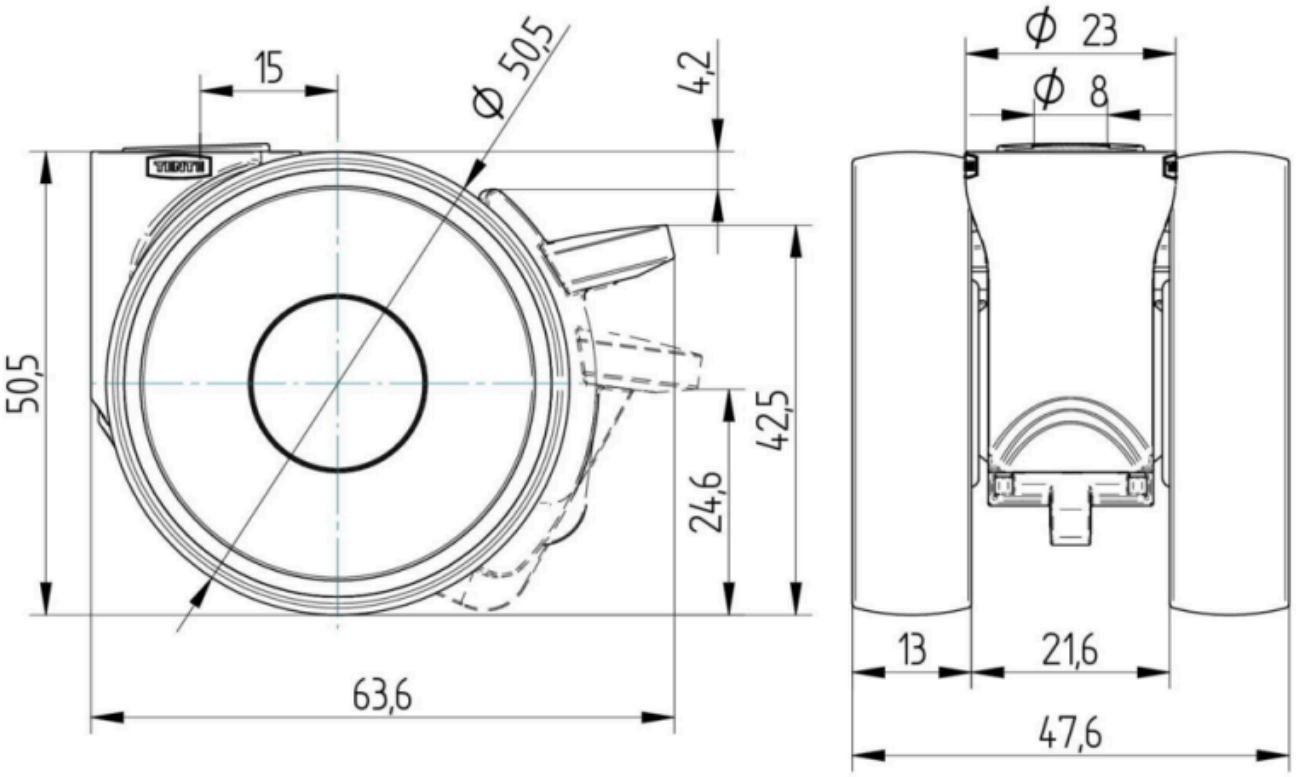

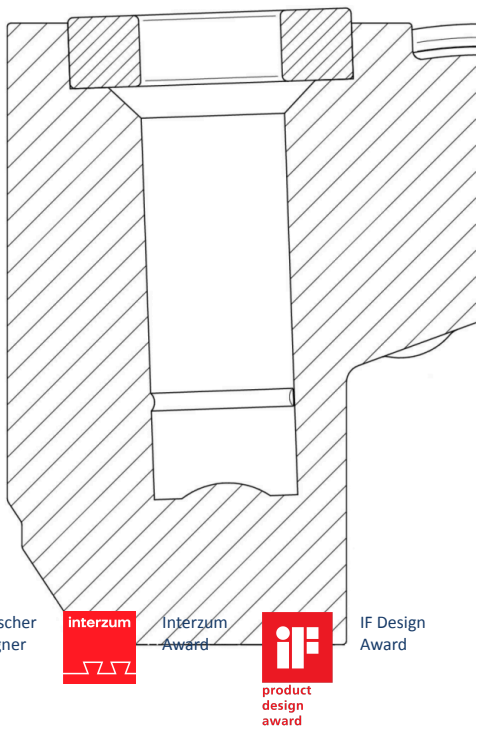

Deutscher Designer Club

Interzum Award

IF Design Award