PRODUCT INFORMATION

ALPHA

3470UFJ125P30-13 T/G-small

EAN 4031582381399



Image may differ from the original product

PERFORMANCE

Roll Performance	●●●●○
Movement noise	●●●●○
Attrition	●●●○○
Corrosion resistance	●●●○○

CORE ATTRIBUTES

Product name	Alpha
Type	Swivel caster
Standard	EN12532 - Transport Equipment
Load capacity at 2.5 mph	330.69 lb
Electric conductive	no
Stainless	no
Load capacity Static	661.39 lb
Temperature range (Minimum)	-4 °F
Temperature range (Maximum)	176 °F
Overall height	6.1 in
Overall width	2.95 in
Overall weight	2.22 lb

HOUSING

Housing Material	Steel sheet, heavy
Fork shape	Broad
Swivel bearing	Two ball races
Housing Color	Blue passivated
Offset	1.57 in
Swivel radius	4.04 in
Swivel interference	8.07 in
Dome diameter	2.95 in

WHEEL

Tread hardness	soft
Body material	Polyamide
Tread material	Elastic tire, non-marking, vulcanized
Bearing	Roller bearing
Axle	Screwed with nut
Wheel color	Silver gray (RAL7001)
Threadguards	With threadguard
Diameter	4.92 in
Tread width	1.57 in
Body width	1.57 in
Hardness of tread (A)	63 Shore A

FITTING

Fitting type	Bolt hole
Bolt hole diameter	0.51 in

© Copyright 2026 TENTE International GmbH

ALPHA

3470UFJ125P30-13 T/G-small

EAN 4031582381399

Order number 00029623

Product Drawings

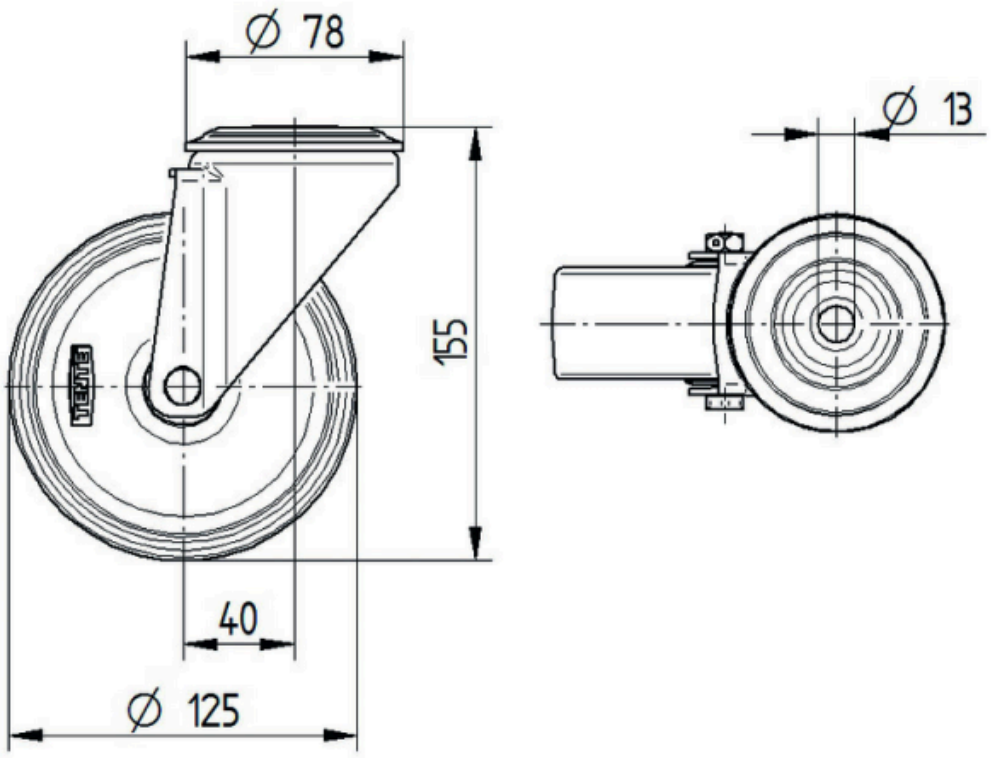

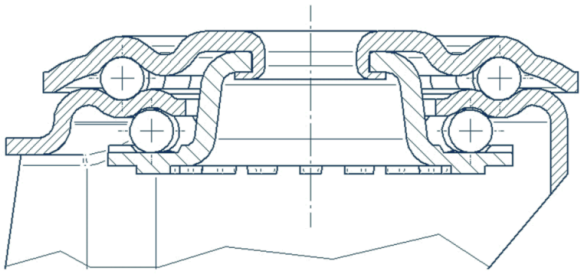

© Copyright 2026 TENTE International GmbH