PRODUCT INFORMATION

INTEGRAL TWIN

2944USX100R26-28S45 4xM8

EAN 4031582341713



Image may differ from the original product

PERFORMANCE

Roll Performance	●●●●●
Movement noise	●●●○○
Attrition	●●●●○
Corrosion resistance	●●●○○

CORE ATTRIBUTES

Product name	Integral twin
Type	Swivel caster with central, total or directional lock
Standard	similar EN12531- Hospital Bed Castors
Load capacity at 1.8 mph	275.58 lb
Load capacity at 2.5 mph	275.58 lb
Electric conductive	Yes
Stainless	no
Load capacity Static	551.16 lb
Temperature range (Minimum)	-22 °F
Temperature range (Maximum)	176 °F
Overall height	5.08 in
Overall width	2.36 in
Overall weight	3.09 lb
Certification	Tested and monitored by TÜV Süd

HOUSING

Housing Material	Steel sheet, medium
Fork shape	Twin wheel housing
Swivel bearing	Precision ball bearing
Offset	1.22 in
Swivel radius	3.19 in
Swivel interference	6.38 in

WHEEL

Body material	Polyamide
Tread material	Polyurethane, injected, electric-conductive
Bearing	Precision ball bearing, sealed
Threadguards	With threadguard
Diameter	3.94 in
Tread width	0.59 in
Hardness of tread (D)	40 Shore D

FITTING

Brake cam	Hex cam
Fitting type	Stem with cam hole for profile bars
Bolt diameter	1.1 in
Bolt length	3.78 in
Hint	Washable beds must be sealed in the fitting area by the hospital bed manufacturer.

German Design Award

Red Dot Design Award

© Copyright 2026 TENTE International GmbH

INTEGRAL TWIN

2944USX100R26-28S45 4xM8

EAN 4031582341713

BETTER MOBILITY. BETTER LIFE.

Product Drawings

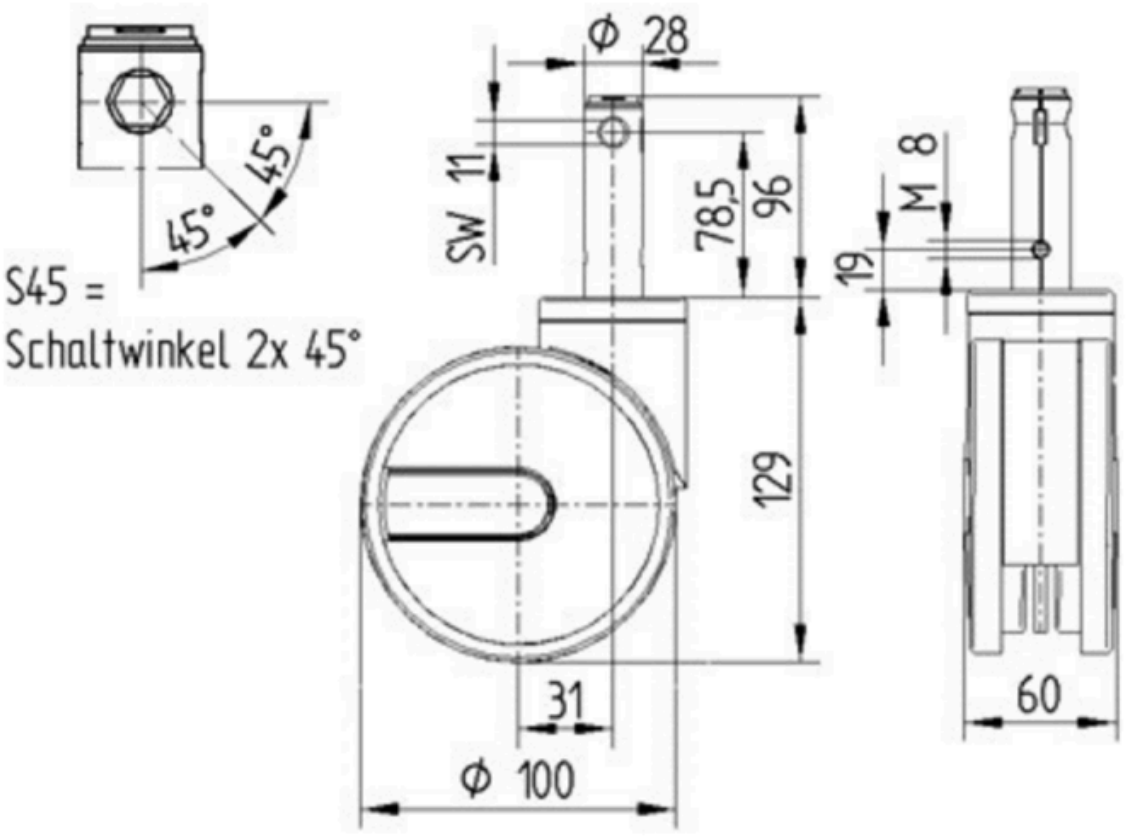

German Design Award

Red Dot Design Award

© Copyright 2026 TENTE International GmbH