PRODUCT INFORMATION

PURETECH

Directional lock 4681/125-250 P63

EAN 4031582438130



Image may differ from the original product

PERFORMANCE

Roll Performance	●●●○○
Movement noise	●●●○○
Attrition	●●●○○
Corrosion resistance	●●●○○

CORE ATTRIBUTES

Product name	Puretech
Type	Accessory
Electric conductive	no
Stainless	no
Overall weight	0.59 lb

© Copyright 2026 TENTE International GmbH

PURETECH

Directional lock 4681/125-250 P63

EAN 4031582438130

BETTER MOBILITY. BETTER LIFE.

Product Drawings

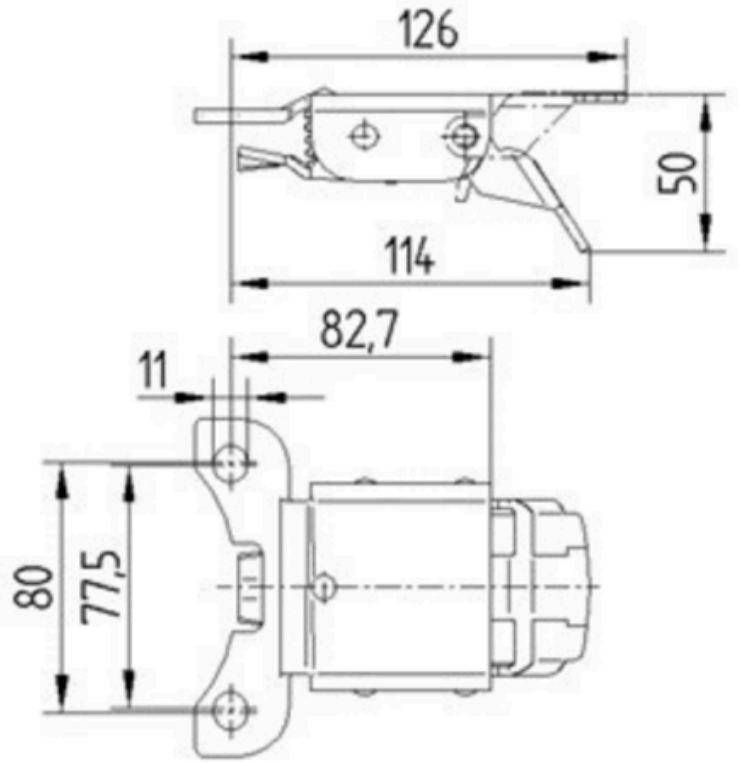

© Copyright 2026 TENTE International GmbH