PRODUCT INFORMATION

# ZETA

## 4687IEP160P63

EAN 4031582308129



Image may differ from the original product

### PERFORMANCE

| | |
|---|---|
| Roll Performance | ●●●●○ |
| Movement noise | ●●●●● |
| Attrition | ●●●○○ |
| Corrosion resistance | ●●●○○ |

### CORE ATTRIBUTES

| | |
|---|---|
| Product name | Zeta |
| Type | Swivel caster with total lock |
| Standard | EN12532 - Transport Equipment |
| Load capacity at 2.5 mph | 771.62 lb |
| Load capacity at 3.7 mph | 617.29 lb |
| Electric conductive | no |
| Stainless | no |
| Load capacity Static | 1543.23 lb |
| Temperature range (Minimum) | -4 °F |
| Temperature range (Maximum) | 185 °F |
| Overall height | 7.87 in |
| Overall width | 3.78 in |
| Overall weight | 7.91 lb |

### HOUSING

| | |
|---|---|
| Housing Material | Steel sheet, very heavy |
| Fork shape | Broad, reinforced |
| Swivel bearing | Two ball races, reinforced or stainless |
| Housing Color | Blue passivated |
| Offset | 2.17 in |
| Swivel radius | 6.34 in |
| Swivel interference | 12.68 in |
| Dome diameter | 3.78 in |

### WHEEL

| | |
|---|---|
| Tread hardness | soft |
| Body material | Aluminum |
| Tread material | Elastic tire, black, vulcanized |
| Bearing | Precision ball bearing |
| Axle | Screwed with nut |
| Wheel color | Jet black (similar RAL9005) |
| Threadguards | Without threadguard |
| Diameter | 6.3 in |
| Tread width | 1.97 in |
| Body width | 1.97 in |
| Hardness of tread (A) | 67 Shore A |

### FITTING

| | |
|---|---|
| Fitting type | Rectangular plate |
| Plate length | 5.39 in |
| Plate width | 4.13 in |
| Plate hole length (Minimum) | 2.95 in |
| Plate hole length (Maximum) | 3.15 in |
| Plate hole width (Minimum) | 2.95 in |
| Plate hole width (Maximum) | 4.13 in |
| Plate hole diameter | 0.43 in |

© Copyright 2026 TENTE International GmbH

# ZETA

4687IEP160P63

EAN 4031582308129

Order number 00804236

**Product Drawings**

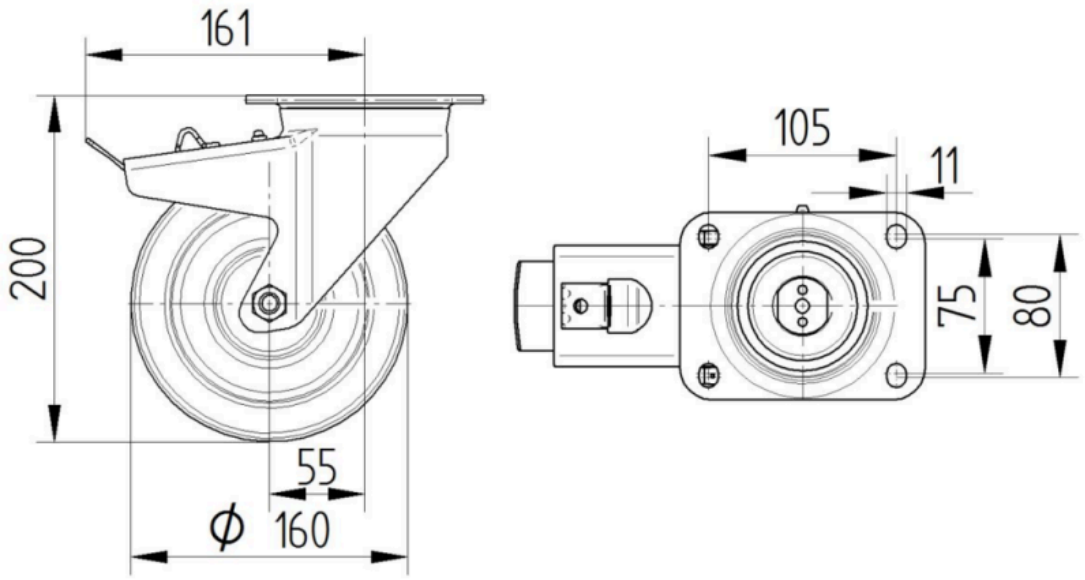


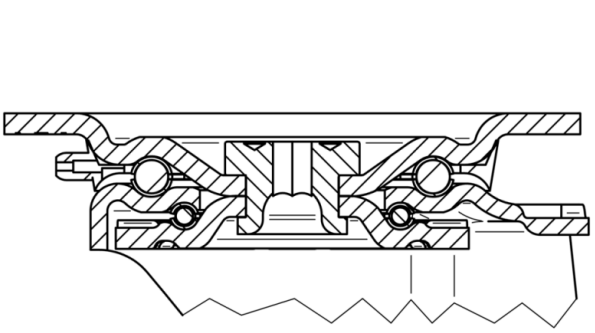

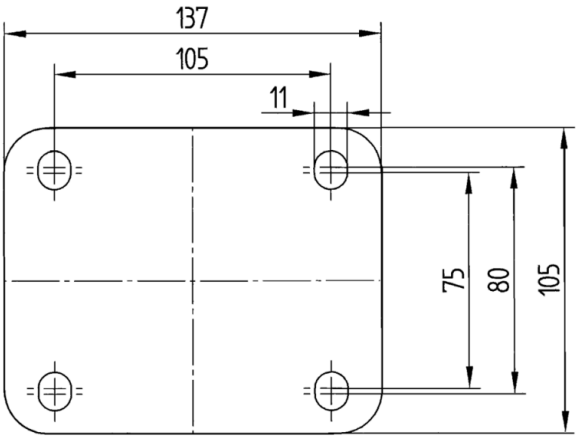


© Copyright 2026 TENTE International GmbH