PRODUCT INFORMATION

AGILA

2471UAP125R05-28 M8/19

EAN 4031582301502



Image may differ from the original product

PERFORMANCE

Roll Performance	●●●○○
Movement Noise	●●●○○
Attrition	●●●●○
Corrosion Resistance	●●●○○

CORE ATTRIBUTES

Product Name	Agila
Type	Swivel castor with directional lock
Standard	EN12530 - Devices Castors
Load capacity at 3 km/h	100 kg
Electric Conductive	No
Stainless	No
Load capacity Static	200 kg
Temperature range (Minimum)	-25 °C
Temperature range (Maximum)	80 °C
Overall Height	163 mm
Overall width	60 mm
Overall weight	1.24 kg

HOUSING

Housing Material	Steel sheet, medium
Fork shape	Broad
Swivel Bearing	Two ball races
Housing Color	Blue passivated
Offset	41 mm
Swivel radius	131 mm
Swivel interference	262 mm
Dome diameter	60 mm

WHEEL

Body material	Polyamide
Tread Material Mix	Polyurethane, injected
Bearing	Precision ball bearing
Wheel Color	Silver grey (RAL7001)
Threadguards	With threadguard
Diameter	125 mm
Tread width	32 mm
Body width	32 mm
Hardness of tread (A)	92 Shore A
Hardness of tread (D)	42 Shore D

FITTING

Fitting type	Solid stem, round
Bolt diameter	28 mm
Bolt length	45 mm
Bolt thread position	19 mm
Bolt mounting holes quantity	2

© Copyright 2026 TENTE International GmbH

AGILA

2471UAP125R05-28 M8/19

EAN 4031582301502

Order number 00030255

Product Drawings

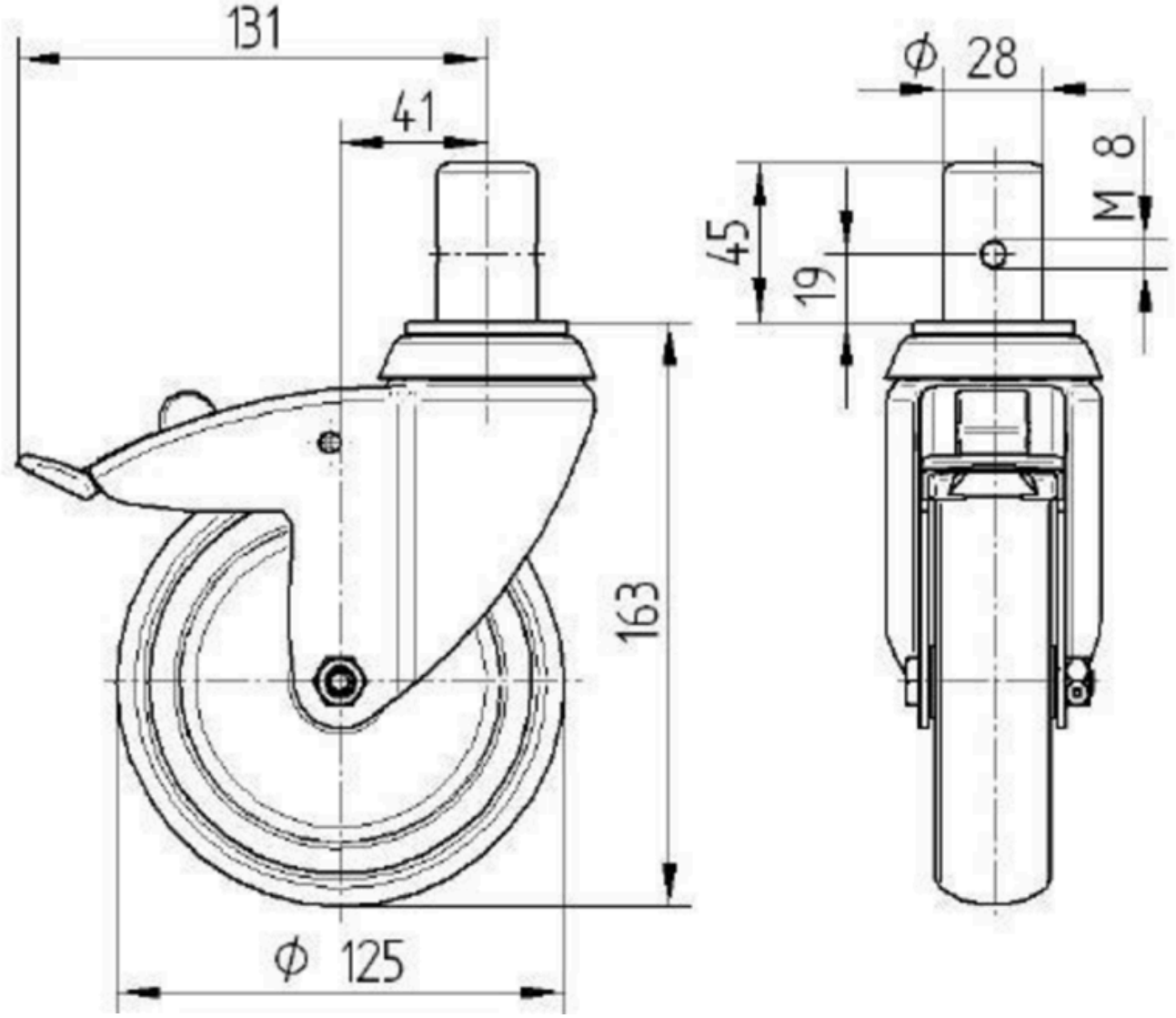

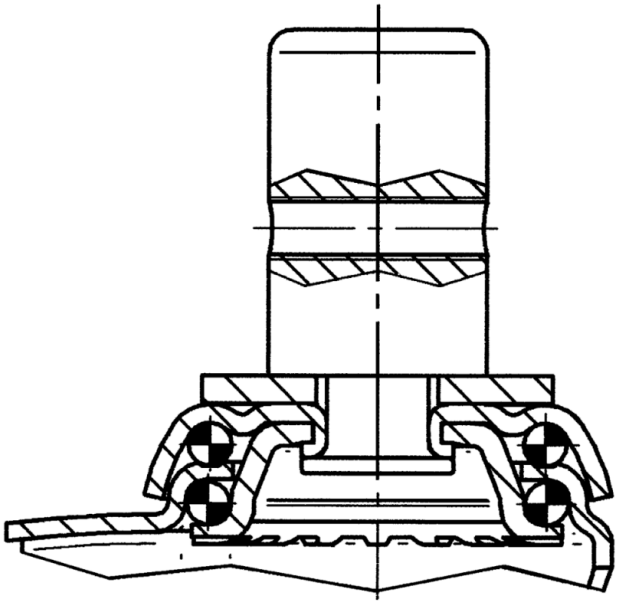

© Copyright 2026 TENTE International GmbH